Recommended Installation Procedures:
Trapeze Support Systems

(Non-Penetrating Support Systems for Rooftop Piping and Ductwork)

MAPA Products pipe supports are designed to meet the 2003 International Building Code in conformance with MSS SP-58 requirements. These freestanding/non-penetrating support systems are typically installed on flat roof applications regardless of roof composition.

Where roof pitch exceeds 1:12 and supports are installed perpendicular to slope, contact your MAPA Products representative for installation alternatives.

Refer to project specifications when required to attach supports to the roof membrane or deck.

Note: MAPA Products does not perform engineering design; the structural engineer is responsible for confirming that the structure upon which supports are installed is designed in accordance with accepted design codes and standards which allow for the installation of rooftop equipment and piping. Further, MAPA Products shall not be liable for damage or injury caused by improper use or installation of the product.



Installation Details:

Trapeze Supports:

- Supports should be evenly spaced so that weights are evenly distributed and do not exceed the maximum weight as outlined by its technical information in the current product catalog or as otherwise stated in the project specifications *(See page 2 of O&M for recommended rooftop support weight limits).*
- If applicable, remove ballast and/or debris from the designated support area.
- If an additional support pad is to be utilized, place pad in the designated support area. If specified, adhere support pad to roof membrane as directed by the roofing manufacturer or as otherwise stated in project specifications.
- Place support as appropriate on either the roof membrane or centered on the support pad. Where specified, adhere support to pad. MAPA Products recommends E-6000 adhesive.
- Place trapeze assembly into bases and secure with provided hardware.
- Place piping or duct on the support. Single piping should be centered with multiple pipes spaced equally on the support. In all cases, piping should be placed so that weight is evenly distributed on the support and overall system load is balanced so as not to cause undo strain on any individual support. Supports are not intended as a platform for piping assembly, but when used as such, care should be taken to avoid damage to the support and surrounding roof area.
- Vertical adjustments should be made with regard to the nature of the installation; either leveled or tapered for flow.
- Secure piping or duct to support as required by project specifications.
- Supports should be cross-braced at intervals as stated by design engineer in project specifications. Where not specified by design engineer, MAPA Products recommends cross-bracing at the end of each run where support height meets or exceeds 36” and/or where the distance from roof surface to bottom of pipe or cross member for duct exceeds 12” then at 80’ intervals or where sway is detected after installation is complete *(See Figure 1 / pg.2 O&M).*
- Replace ballast around the support or pad as appropriate.

Recommended Rooftop Support Weight Limits

Figure 1- Typical Sway Bracing

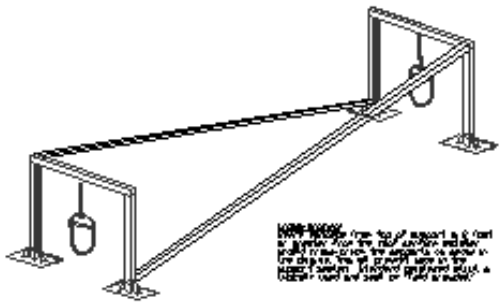

MAPA Master Base Supports

	MB-815/MB-1010	MB-1416/MB-1616	MB-2020/MB-2020-2.5
Recommended Weight / Lbs. Per Base	250	500	800

Note:

- Maximum support spacing should not exceed 10' O.C.
- Additional supports are recommended at each change of direction, branch and at each initiation and termination of the piping run.
- It is the responsibility of the installer to coordinate with the specifying engineer the necessity and/or method in which the support system should be secured against wind shear or uplift.

(Recommended support spacing based on the ASME standard recommended pipe support spacing guidelines.)

(See MAPA Products current catalog for additional information.)

Maintenance:

Often, damage to piping and supports systems occurs during routine maintenance, renovations and/or improvements. This type of damage is difficult to verify, therefore MAPA Products must be notified ten (10) days in advance of roof traffic in conjunction with any major maintenance, renovations and/or improvements and upon completion of said traffic. Damage caused by said traffic is not warranted.

For specific challenges where project design requires custom fabrication for greater adjustability, increased elevations or greater weight loads, additional flanges, material changes, etc. may be incorporated into the design. The project engineer is encouraged to contact MAPA Products for support in these situations.

MAPA Products recommends that support systems be inspected annually. Notice of damage or rusting that is detrimental to the integrity of the support or any of the components included in the support assembly should be provided to MAPA immediately. The owner should conduct annual maintenance to inhibit rusting of any metal components. Refer to MAPA Products warranty effective 2011.

Limited Lifetime Warranty--When installed in accordance with MAPA installation and maintenance specifications and using only MAPA materials, MAPA warrants its support bases and assemblies to be free from defect and will repair or replace product at MAPA's discretion. Rusting that is not detrimental to the integrity of the support is not warranted. Damage caused by incorrect installation, improper usage or improper maintenance is not warranted. Recovery rights shall be limited to the total sum of the amounts paid for the product by the purchaser.

DISCLAIMER OF IMPLIED WARRANTY:
THERE ARE NO WARRANTIES THAT EXTEND BEYOND THE DESCRIPTION HEREIN. SELLER DISCLAIMS ANY IMPLIED WARRANTY OF MERCHANTABILITY OF THE GOODS OR OF THE FITNESS OF THE GOODS FOR ANY PURPOSE, AND BUYER AGREES THAT THE GOODS ARE SOLD “AS IS.”

Limits of Liability:
ISIMET/MAPA liability shall be limited to costs of repair or replacement parts. Supports are not intended for usage other than those expressly described in product catalog. ISIMET/MAPA does not perform engineering design and shall not be liable for damage or injury caused by the improper use or installation of the product.

ISIMET/MAPA, LLC
Copyright © 2020 ISIMET/MAPA, LLC
MAPA Products is a Trade Name of ISIMET/MAPA, LLC a division of WCM Industries. This document is copyrighted. This document may not in whole or part, be copied, duplicated, reproduced, translated, electronically stored, or reduced to machine readable form without prior written consent from **ISIMET/MAPA, LLC.**

Although the material contained herein has been carefully reviewed, **ISIMET/MAPA, LLC** does not warrant it to be free of errors or omissions. **ISIMET/MAPA, LLC** reserves the right to make corrections, updates, revisions, or changes to the information contained herein.

Printed in the United States of America.

MAPA Products, LLC.
103 C J Wise, Naples, TX 75568
MAPA: 903-781-6996
customerservice@mapaproducts.com