**MAPA Products**, LLC.
**MPD-XX / Eaton Pedestal Disconnect**
**30, 60, 100 amp**
January 2020
Doc. #: M-15102



**Installation Instructions – Parts List**

MAPA Products Fusible Rainproof Pedestal Mounted Safety Switch provides local disconnect of the electrical service at roof mounted equipment. The Stainless Shroud with integrally welded deck flange enables a positive weather-tight flash of the unit to the roof membrane without the need for additional flashing or pitch-pan.

**Features:**

The Standard Stainless Steel Shroud extends above roof line thirty-six inches with an additional twelve inches beneath roofline so as to permit the unit to be securely fastened to the roof struc- tural member by securing the under-deck mounting flange to a welded deck flange or securing field provided ATR to provided weld nuts on the underside of the roof flange.

Pedestals are furnished completely assembled with Safety Switch and wiring leads. Electrical service wire cable leads for termination at the equipment are protected by Liquid-Tight Steel
Core Flexible Conduit. Leads for connection to the power source below the roofline are shielded in Metal Conduit. Wiring service for the GFCI is provided in a separate flexible conduit. Wiring and Conduit sizes are according to industry standards and NEC. All connections exposed to weather are made liquid tight. Optional termination cables are available in five (5) or ten (10) foot lengths. We recommend using support devices such as MAPA Strut Supports when a distance between the Pedestal and the service equip- ment exceeds three feet.

All safety switch disconnects are furnished with NEMA 3R Rainproof enclosure. The switch is provided with handle suitable for padlocking in the OFF position. Defeat-able front accessible door prevents opening of switch when in ON position or turning the switch ON when the door is open.

**Series and Model Specifics:**

| Model | Description | Vac. | Max rating |
|---|---|---|---|
| **Pedestal Only:** | | | |
| MPX4:36/12 | 36” Utility Pedestal W/O Disconnect | | |
| **General Duty Series:** | Utilizes Eaton Model # DG221NRB Safety Switch. 2 wire (2 Blades and Fuse holders, 1 Neutral) 120-240 Vac. | | |
| MPD-30:36/12 | Max rating 30 amps. - UL Listed, File E2875. Designed for light to medium duty applications such as roof mounted air conditioning units and exhaust fans. | | |
| MPD-30:36/12 | 2 Blades / 2 Fuse holders / 2 wire | 240 Vac | 30 amp |
| **Heavy Duty Series:** | Switches are provided without fuses. Other configurations are available, including non-fused for heavy duty series, to meet specific design criteria. | | |
| MPDE-30-2X:42/12 | 2 Blades / 2 Fuse holders / 2 wire | 240 Vac | 30 amp |
| MPDE -60-2X:48/12 | 2 Blades / 2 Fuse holders / 2 wire | 240 Vac | 60 amp |
| MPDE -100-2X:48/12 | 2 Blades / 2 Fuse holders / 2 wire | 240 Vac | 100 amp |
| MPDE -30-3Z:42/12 | 3 Blades / 3 Fuse holders / 3wire | 600 Vac | 30 amp |
| MPDE -60-3Z:48/12 | 3 Blades / 3 Fuse holders / 3 wire | 600 Vac | 60 amp |
| MPDE -100-3Z:48/12 | 3 Blades / 3 Fuse holders / 3 wire | 600 Vac | 100 amp |

2 240 VAC W/ O neutral
3 600 VAC W/O neutral
(3X and 4X includes Neutral Bar)

*Pedestals are custom fabricated for specific project requirements; these units may require a (10) day lead time for quotation and typically require a four (4) week lead time after product submittal approval.*

**Component Specifics:**

Pedestal – 4" X 4" 304 Stainless Square Tubing, Total length indicated by suffix xx/yy

Solid welded stainless cap tops off the Shroud.

Roof Flange – 304 Stainless sheet – continuous welded seam at Pedestal. Under Deck Flange – Welded sheet metal – black painted w/ anchor bolts and trim to secure Pedestal to roof structure.

**Optional Features available:**

| | |
|---|---|
| *NF* | Non-Fused Disconnect |
| *G* | GFCI-Heavy Duty Commercial grade receptacle housed in an Extra Duty aluminum weatherproof outlet box with weatherproof While In Use hinged cover plate. |
| *A* | Lightning Surge Arrestor- Arrestor is mounted to side of Safety Switch / 240 Single Phase or 480 Three Phase |
| *P* | Control Port |
| *5C* | 5' Termination cable / Liquid-Tight Steel Core Flexible Conduit. (3 Wire W/ Ground) |
| *10C* | 10' Termination cable / Liquid-Tight Steel Core Flexible Conduit. (3 Wire W/ Ground) |
| 2X to 3X<br>3Z to 4Z | Add Neutral Assembly—Available on all Disconnects |
| ** D* | An upper deck cap may be specified; Fit for standard 12"x12"x10" curb (Field provided) Standard below flange dimension increases to 24". |
| ** Suffix:xx/yy* | Extended shroud for above or below roofline. (Specify in model number-6" increments. ie., -54/12) |
| MX-1.500 –SA | Accessory Structural Support Bracing where height is ≥ 48" above roof |
| 1183 | SPSA 45° Fixed Bracket with Hardware |

* Options available for the MPX4:36/12

**Wiring – Conduit Specifications: Standard Sizes – AWG**

| Amp Rating | Conductors | AWG | GND AWG | Conduit Size |
|---|---|---|---|---|
| 30 | 3 | 10 | 12 | 1" |
| 60 | 3 | 6 | 10 | 1 1/4" |
| 100 | 3 | 2 | 6 | 1-1/4" |

**Unpacking the Pedestal:**

Parts Included:

Disconnect

Assembly
Under-deck flange
Assembly
Hardware
Installation
Instructions

Assembly Hardware is located in a plastic bag that is attached to the underside of the under-deck flange.

Parts:
2 – ¼" X 1" set screws
4 – ¼" X 1 ½" set screws
1 – weather-tight connector
(only when unit is provided with termination cable.) Verify that all assembly parts are present

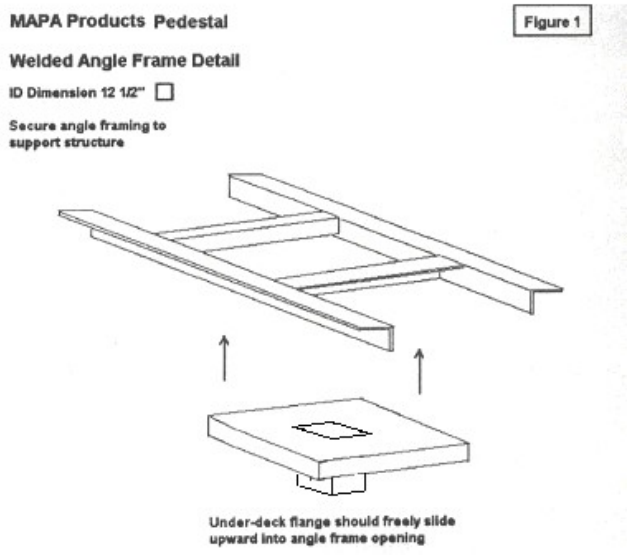

**Recommended Installation Procedures:**

**Support Framing:** We strongly recommend that prior to the installation of this Roof mounted Pedestal Disconnect that a welded angle frame be installed at the bottom surface of the roof decking. This framing should be of sufficient size to permit the provided under-deck flange to slide freely yet firmly into the frame and rest firmly against its top. The framing should be of sufficient strength to prevent any dislodging of the Pedestal during normal operation.

**Installation Sequencing:**

We recommend that the Pedestal Disconnect not be installed until the roof decking and all roof insulation is in place. A square hole should be cut in the roof insulation and deck to permit the Pedestal to pass from the roof surface through this hole to below roofline with the base resting squarely on the insulation. We do not recommend making final wiring connections to the Pedestal until all roof work associated with making the Pedestal base watertight to the roof is completed and then not until the under-deck clamp has been installed.

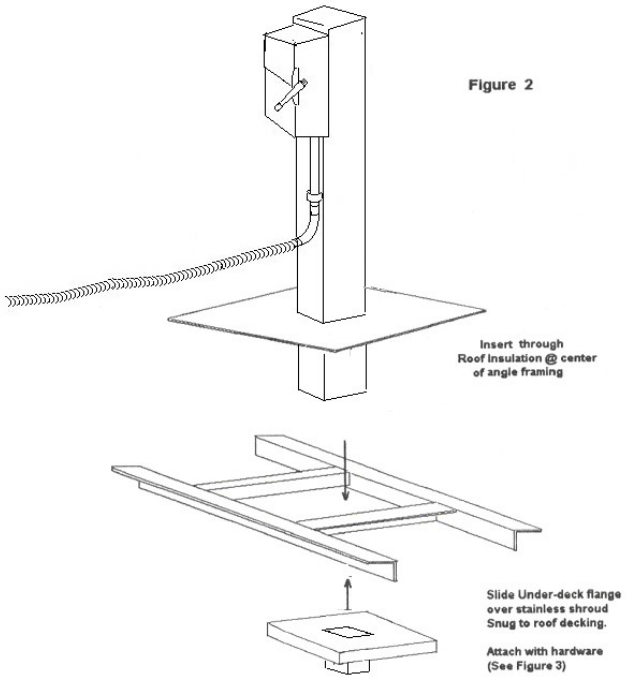


Figure 2

**Installation of the Pedestal:** A hole approximately five inches (5") square should be cut in the roof decking. The hole should be centered on a angle frame welded to the roof structure below the decking. Once roof insulation is in place, cut through the insulation and place the Pedestal base squarely onto the roof surface. Square the Pedestal, pointing the safety switch in the desired direction.

Refer to **Figure 2** of the Instructions.

Caution should be taken to assure that the Pedestal is vertically level above the roof. We do not recommend installing the Pedestal within four feet of the edge of the roof or within three feet of other roof top equipment or on any sloping surfaces of the roof.

**Installation of the Under-deck Flange:** Once roofing work at the Pedestal has been completed, the under-deck flange should be installed. Slide the under-deck flange from below, over the lower portion of the Pedestal's shroud. Snug the flange securely to the deck and angle framing. Using the four (4) ¼" X 1 ½" set screws, secure the flange to the angle framing. Care should be taken to insure that the under-deck flange is firm against the bottom of the roof deck while tightening these set screws. See **Figure 3.**

Next, using the two (2) ¼" X 1" set screws, securely fasten the under-deck flange to the stainless flange

Refer to **Figure 3** of the Instructions.

**Figure 3**

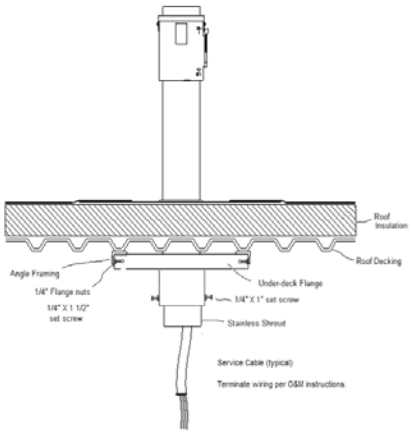

Figure 4

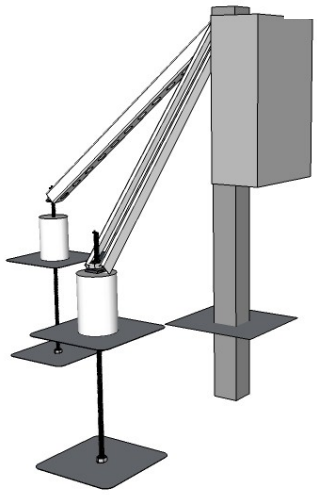

Additional structural bracing should be utilized where vertical sway is detected. Attachment points are provided on the pedestal for these connections. An available accessory package MAPA Products model number M-PSA2 provides the necessary hardware to attach the pedestal to the roof structure, utilizing a ridged strut design. **Figure 4 Side View.**

**Weather Proofing the Pedestal:**
This Pedestal should be flashed and made water-tight to the adjoining roof membrane according to industry standards and project specific requirements. This work should only be performed by those skilled in the roofing trade.

**Installation of the Electrical Service:**
Only qualified electricians licensed to perform electrical work in the jurisdiction where the Pedestal is to be installed should make wiring connections or perform service to this unit.

Make connections to the service wire leads using a field provided industry standard junction box. This box should be installed per industry standards and per local governing codes.

It is recommended that this junction box be secured to a structural member. Where a GFCI is included in this assembly, and unless specifically approved by local jurisdiction, then the wiring connections should be housed in a separate junction box.

**Connections to the Electrical Power Source:**
We recommend that a field provided junction box be installed at the wiring termination point below the roof serving the Pedestal. If a GFCI and/or Control is included in the assembly, it is recommended that separate junction boxes be used for each circuit's termination.

**CAUTION: Pedestals should never be used as a means to secure safety harness attachments.**

**CAUTION:** All local electrical codes should be followed when installing this Pedestal and connecting wiring to the unit. Verify that electrical supply is disconnected prior to connection of termination or service wiring or before performing service to the unit.

**Electrical Service Test:**.
It is recommended that a thorough test and inspection of the wiring services be performed on the completed assembly prior to placing it into service.

**Terminations at the Device:**
Wiring terminations and conduit connections to the electrical device served by the Pedestal Disconnect should be made per local governing codes.

**Fuse Selection:**
Fuses are not provided with this unit. Only install fuses that comply with the specific requirements of the safety switch manufacturer. Fuse size and ratings should conform to the requirements specified for the electrical device serviced by the Pedestal.

**Control Port:**
Where the unit is provided with a control port, a pull string will extend from the port mounted on the face of the shroud, through a ½" conduit and terminate to a point below the roof line. Control cable can be routed through this conduit for field termination to the electrical device serviced by the Pedestal. This control cable should not be routed within conduit where line voltage is present. Cable and termination should be installed by a qualified building automation technician.

**Maintenance:**
A periodic test and examination of the Pedestal should be performed to assure that no damage has occurred to the unit. Immediately disconnect service to the unit and contact a factory agent if the Pedestal appears damaged or fails to operate as intended.

**Limited Warranty:**
Limited Lifetime Warranty--When installed in accordance with MAPA installation and maintenance specifications and using only MAPA materials, MAPA warrants its support bases and assemblies to be free from defect and will repair or replace product at MAPA's discretion. Rusting that is not detrimental to the integrity of the support is not warranted. Damage caused by incorrect installation, improper usage or improper maintenance is not warranted. Recovery rights shall be limited to the total sum of the amounts paid for the product by the purchaser.

**DISCLAIMER OF IMPLIED WARRANTY:**
THERE ARE NO WARRANTIES THAT EXTEND BEYOND THE DESCRIPTION HEREIN. SELLER DISCLAIMS ANY IMPLIED WARRANTY OF MERCHANTABILITY OF THE GOODS OR OF THE FITNESS OF THE GOODS FOR ANY PURPOSE, AND BUYER AGREES THAT THE GOODS ARE SOLD "AS IS."

Limits of Liability:
ISIMET/MAPA liability shall be limited to costs of repair or replacement parts. Supports are not intended for usage other than those expressly described in product catalog. ISIMET/MAPA does not perform engineering design and shall not be liable for damage or injury caused by the improper use or installation of the product.

**ISIMET/MAPA, LLC**

**Copyright © 2020 ISIMET/MAPA, LLC**

MAPA Products is a Trade Name of ISIMET/MAPA, LLC a division of WCM Industries. This document is copyrighted. This document may not in whole or part, be copied, duplicated, reproduced, translated, electronically stored, or reduced to machine readable form without prior written consent from **ISIMET/MAPA, LLC.**

Although the material contained herein has been carefully reviewed, **ISIMET/MAPA, LLC** does not warrant it to be free of errors or omissions. **ISIMET/MAPA, LLC** reserves the right to make corrections, updates, revisions, or changes to the information contained herein.

Printed in the United States of America.

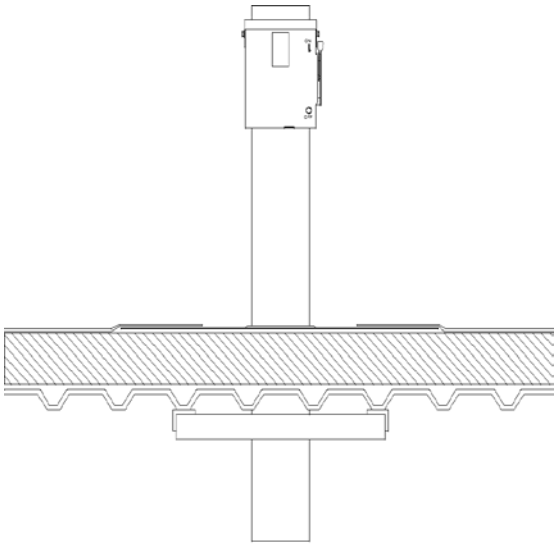

**MAPA Products, LLC.**
103 C J Wise, Naples, TX 75568
MAPA: 903-781-6996
customerservice@mapaproducts.com