MAPA Products, LLC.
MPD-XX –SA Pedestal Disconnect
30, 60, 100 amp
January 2020
Doc. #: M-15101

Pedestal Disconnect



Installation Instructions – Parts List

MAPA Products Fusible Rainproof Pedestal Mounted Safety Switch provides local disconnect of the electrical service at roof mounted equipment. The Stainless Shroud with integrally welded deck flange enables a positive weather-tight flash of the unit to the roof membrane without the need for additional flashing or pitch-pan.

Features:

The Standard Stainless Steel Shroud extends above roof line thirty-six (36”) inches with an additional twelve (12”) inches beneath roofline so as to permit the unit to be securely attached to the roof using the included ATR, 1 5/8” X 1 5/8” Strut and necessary hardware.

Pedestals are furnished completely assembled with Safety Switch and wiring leads. Electrical service wire cable leads for termination at the equipment are protected by Liquid-Tight Steel Core Flexible Conduit. Leads for connection to the power source below the roofline are shielded in Metal Conduit. Wiring service for the GFCI is provided in a separate flexible conduit. Wiring and Conduit sizes are according to industry standards and NEC. All connections exposed to weather are made liquid tight. Optional termination cables are available in five (5’) or ten (10’) foot lengths. We recommend using support devices such as MAPA Strut Supports when the distance between the Pedestal and the service equipment exceeds three feet.

All safety switch disconnects are furnished with a NEMA 3R Rainproof enclosure. The switch is provided with a handle suitable for padlocking in the OFF position. Defeat-able front accessible door prevents opening of the switch when in the ON position or turning the switch ON when the door is open.

Series and Model Specifics:

Model	Description	Vac.	Max rating
Pedestal Only:			
MPX4:36/12	36” Utility Pedestal W/O Disconnect		
General Duty Series:			
MPD-30:36/12	2 Blades / 2 Fuse holders / 2 wire	240 Vac	30 amp
Heavy Duty Series:			
MPD-30-2X:42/12	2 Blades / 2 Fuse holders / 2 wire	240 Vac	30 amp
MPD-60-2X:48/12	2 Blades / 2 Fuse holders / 2 wire	240 Vac	60 amp
MPD-100-2X:48/12	2 Blades / 2 Fuse holders / 2 wire	240 Vac	100 amp
MPD-30-3Z:42/12	3 Blades / 3 Fuse holders / 3 wire	600 Vac	30 amp
MPD-60-3Z:48/12	3 Blades / 3 Fuse holders / 3 wire	600 Vac	60 amp
MPD-100-3Z:48/12	3 Blades / 3 Fuse holders / 3 wire	600 Vac	100 amp

2X= 240 VAC w/o neutral
3Z= 600 VAC w/o neutral
(3X and 4X includes Neutral Bar)

Pedestals are custom fabricated for specific project requirements; these units may require a (10) day lead time for quotation and typically require a four (4) week lead time after product submittal approval.

Component Specifics:

Pedestal – 4" X 4" 304 Stainless Square Tubing, Total length indicated by suffix xx/yy.

Solid welded stainless cap tops off the Shroud.

Roof Flange – 304 Stainless sheet – continuous welded seam at Pedestal.

Optional Features available:

NF	Non-Fused Disconnect
G	GFCI-Heavy Duty Commercial grade receptacle housed in an Extra Duty aluminum weatherproof outlet box with weatherproof While In Use hinged cover plate.
A	Lightning Surge Arrestor- Arrestor is mounted to side of Safety Switch / 240 Single Phase or 480 Three Phase
P	Control Port
5C	5' Termination cable / Liquid-Tight Steel Core Flexible Conduit. (3 Wire W/ Ground)
10C	10' Termination cable / Liquid-Tight Steel Core Flexible Conduit. (3 Wire W/ Ground)
2X to 3X 3Z to 4Z	Add Neutral Assembly - Available on all Disconnects
** D*	An upper deck cap may be specified; Fit for standard 12"x12"x10" curb (Field provided) Standard below flange dimension increases to 24".
** Suffix:xx/yy*	Extended shroud for above or below roofline. (Specify in model number-6" increments. ie., -54/12)
MX-1.500 -SA	Accessory Structural Support Bracing where height is ≥ 48" above roof
1183	SPSA 45° Fixed Bracket with Hardware

* Options available for the MPX4:36/12

Wiring – Conduit Specifications: Standard Sizes – AWG

Amp Rating	Conductors	AWG	GND AWG	Conduit Size
30	3	10	12	1"
60	3	6	10	1 1/4"
100	3	2	6	1-1/4"

Unpacking the Pedestal:

Parts Included:

Disconnect Assembly
Structurally Attached Mounting Kit
Installation Instructions
Roof Template

Assembly Hardware is located in a plastic bag that is attached to the underside of the under-deck flange.

Parts:

2 — 1 5/8" X 24"L 12g, Slotted Gold Galv finish Strut
4 — 1 1/2" ATR
4 — 2" OD X 1/2" ID 18-8 SS Fender Washers
4 — 1/2" ID 18/8 SS Flat Washers
8 —1/2" 18-8 SS Hex Nuts
1 – weather-tight connector
(only when unit is provided with termination cable.)
Verify that all assembly parts are present.

Installation Sequencing:

We recommend that the Pedestal Disconnect not be installed until the roof decking and all roof insulation is in place. A square hole should be cut in the roof insulation and deck to permit the Pedestal to pass from the roof surface through this hole to below roofline with the base resting squarely on the insulation. We do not recommend making final wiring connections to the Pedestal until all roof work associated with making the Pedestal base watertight to the roof is completed and then not until the Pedestal is securely mounted to the roof with the Structurally attached hardware for SA models.

Figure 2

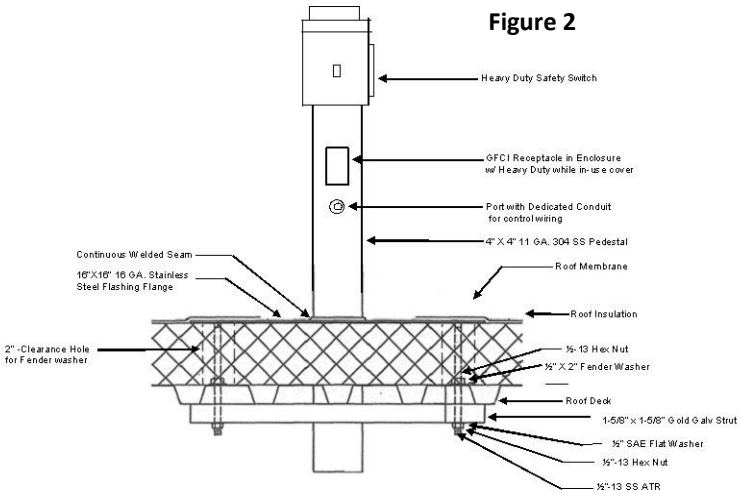

Installation of the Pedestal - SA:

1. Pull out the enclosed Roof Template and lay out on the roof in the desired location and direction that you want the Pedestal to face.

2. Mark the locations of the (4) four 9/16" holes on the roof and mark out the 4 1/8" square hole in the center.

3. Drill the 9/16" holes all the way through the roof. Once these holes have been drilled,

4. Cut a 2" diameter hole with a 2" Drill or hole saw and in each of the four locations. Then drill the hole just through the insulation stopping at the roof deck.

5. Cut the center square hole of the pedestal post to go all the way through the roof.

6. Measure the depth of the 2" deep hole and use this measurement as a place to start with for the location of the first nut and the 2" fender washer from the bottom of the Pedestal flange.

7. Attach the (4) four pieces of 1/2-13X16" ATR to the bottom of the flange and drop the Pedestal into the holes on the roof.

8. Next using the (2) two pieces of 1 5/8" X 1 5/8" Gold Galvanized Strut, place against the bottom of the roof deck from inside the building and attach to the 4-four pieces of ATR using the 4-four nuts and the 4-four washers and tighten evenly to secure to the roof.

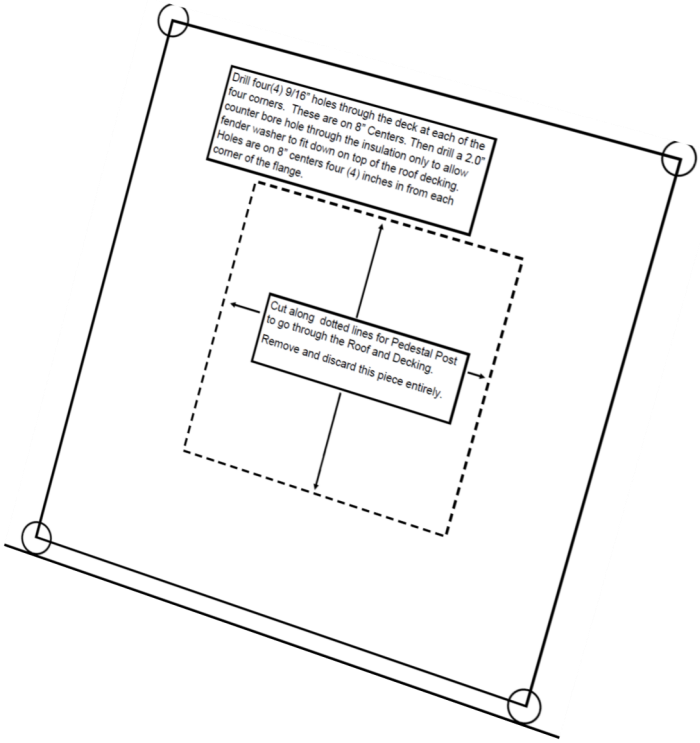

Additional structural bracing should be utilized where vertical sway is detected. Attachment points are provided on the pedestal for these connections. An available accessory package MAPA Products model number M-PSA2 provides the necessary hardware to attach the pedestal to the roof structure, utilizing a ridged strut design. **Figure 3 Side View.**

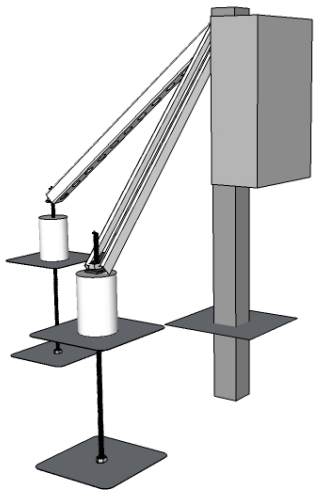

Figure 3

Weather Proofing the Pedestal:
This Pedestal should be flashed and made water-tight to the adjoining roof membrane according to industry standards and project specific requirements. This work should only be performed by those skilled in the roofing trade.

Installation of the Electrical Service:
Only qualified electricians licensed to perform electrical work in the jurisdiction where the Pedestal is to be installed should make wiring connections or perform service to this unit.

Make connections to the service wire leads using a field provided industry standard junction box. This box should be installed per industry standards and per local governing codes.

It is recommended that this junction box be secured to a structural member. Where a GFCI is included in this assembly, and unless specifically approved by local jurisdiction, then the wiring connections should be housed in a separate junction box.

Connections to the Electrical Power Source:
We recommend that a field provided junction box be installed at the wiring termination point below the roof serving the Pedestal. If a GFCI and/or Control is included in the assembly, it is recommended that separate junction boxes be used for each circuit's termination.

CAUTION: Pedestals should never be used as a means to secure safety harness attachments.

CAUTION: All local electrical codes should be followed when installing this Pedestal and connecting wiring to the unit. Verify that electrical supply is disconnected prior to connection of termination or service wiring or before performing service to the unit.

Electrical Service Test:.
It is recommended that a thorough test and inspection of the wiring services be performed on the completed assembly prior to placing it into service.

Terminations at the Device:
Wiring terminations and conduit connections to the electrical device served by the Pedestal Disconnect should be made per local governing codes.

Fuse Selection:
Fuses are not provided with this unit. Only install fuses that comply with the specific requirements of the safety switch manufacturer. Fuse size and ratings should conform to the requirements specified for the electrical device serviced by the Pedestal.

Control Port:
Where the unit is provided with a control port, a pull string will extend from the port mounted on the face of the shroud, through a ½" conduit and terminate to a point below the roof line. Control cable can be routed through this conduit for field termination to the electrical device serviced by the Pedestal. This control cable should not be routed within conduit where line voltage is present. Cable and termination should be installed by a qualified building automation technician.

Maintenance:
A periodic test and examination of the Pedestal should be performed to assure that no damage has occurred to the unit. Immediately disconnect service to the unit and contact a factory agent if the Pedestal appears damaged or fails to operate as intended.

Limited Warranty:

ISIMET/MAPA, LLC will repair or replace any defective parts or workmanship of this product for a period of one year from date of delivery. Damage caused by incorrect installation, alteration or improper usage is not warranted. Recovery rights shall be limited to the total sum of the amounts paid for the product by the purchaser.

DISCLAIMER OF IMPLIED WARRANTY:
THERE ARE NO WARRANTIES THAT EXTEND BEYOND THE DESCRIPTION HEREIN. SELLER DISCLAIMS ANY IMPLIED WARRANTY OF MERCHANTABILITY OF THE GOODS OR OF THE FITNESS OF THE GOODS FOR ANY PURPOSE, AND BUYER AGREES THAT THE GOODS ARE SOLD "AS IS."

Limits of Liability:

ISIMET/MAPA, LLC liability shall be limited to costs of repair or replacement parts. Pedestals are not intended for usage other than those expressly described in this document. **ISIMET/MAPA, LLC** shall not be liable for damage or injury caused by the improper use of the product.

ISIMET/MAPA, LLC

Copyright © 2017 ISIMET/MAPA, LLC

MAPA Products is a Trade Name of ISIMET/MAPA, LLC a division of WCM Industries. This document is copyrighted. This document may not in whole or part, be copied, duplicated, reproduced, translated, electronically stored, or reduced to machine readable form without prior written consent from **ISIMET/MAPA, LLC.**

Although the material contained herein has been carefully reviewed, **ISIMET/MAPA, LLC** does not warrant it to be free of errors or omissions. **ISIMET/MAPA, LLC** reserves the right to make corrections, updates, revisions, or changes to the information contained herein.

Printed in the United States of America.



MAPA Products, LLC.
103 C J Wise, Naples, TX 75568
MAPA: 903-781-6996
customerservice@mapaproducts.com