MAPA Products
MPSD-(*XX*)-R / Starter-Disconnect

MPSD-(*XX*)-R-S / Starter-Disconnect W/ Panel Switches

MPSD2-(XX)-R-S / Two Speed Starter Disconnect
January 2020
Doc # M-15400

Pedestal
Starter-Disconnect



Installation Instructions & Parts List

The MAPA Products Fusible Rainproof Pedestal Mounted Safety Switch provides local starter-disconnect of the electrical service at roof mounted equipment. The Stainless Shroud with integrally welded deck flange enables a positive weather-tight flash of the unit to the roof membrane without the need for additional flashing or pitch-pan. The need to interrupt electrical service remotely in the case or equipment change-out can be avoided since service disconnect is mounted adjacent to rather than onto the equipment. Disconnects are available in Grey Powder Coat. Optionally features may include a GFCI duplex plug with a weatherproof cover as well as a termination cable.

Features:

The standard stainless steel shroud extends above roof line 52, 66 or 74 inches (depending on Disconnect model) with an additional twelve inches beneath the roofline so as to permit the unit to be securely fastened to the roof structural members by securing the under-deck mounting flange to a welded deck flange. The roof flange is provided with fastening hardware to enable the installer to secure the flange first against the shroud and then onto a deck flange. Models R-S are provided with a Panel Operating Switch.

Pedestals are furnished completely assembled with Safety Switch and wiring leads below the roofline. Where provided, electrical service wire cable leads for termination at the equipment are protected by Liquid-Tight Steel Core Flexible Conduit. Leads for connection to the power source below the roofline are shielded in Flexible Metal Conduit.

Wiring service for the optional GFCI is provided in a separate flexible conduit. Wiring and Conduit sizes are according to industry standards and NEC. All connections exposed to weather are made liquid tight. Optional termination cables are available in 5’ and 10’ lengths. We recommend using support devices such as MAPA Strut Supports when a distance between the Pedestal and the service equipment exceeds three feet.

Safety switch starter/disconnects are furnished with NEMA 12/3 Rainproof, grey powder coated enclosure. The switch is provided with handle suitable for padlocking in the OFF position. Defeat-able front accessible door prevents opening of switch when in ON position or turning the switch ON when the door is open.

Typical Product Specifications:

Provide MAPA Products Stainless Steel Pedestal Starter-Disconnect where shown at roof-mounted equipment. Disconnects shall be provided with voltage ratings suitable for normal voltage of the equipment with which they are to be applied. Mount pedestal within 4 feet of the equipment served and as directed by engineer. Each pedestal shall be furnished complete with termination cable, under-deck flange, GFCI convenience outlet.

Series and Model Specifics:
Designed for 3 phase applications such as roof mounted air conditioning units and exhaust fans. The fuses and heaters required to meet the demands of the unit are to be field provided. Other configurations are available to meet specific design criteria. Pedestals are custom fabricated for specific project requirements with a (10) day lead time for quotation and typically require a four (4) week lead time after product submittal approval.

EXTENDED LENGTH SHROUDS
(optional)

Shroud Length may be extended both above and below roof flange.
Ie.. suffix –XX/YY

(Maximum shroud extended to 90")

Component Specifics:
Pedestal - 4" X 4" 11 gauge T-304 Stainless Square Tubing. Solid welded stainless cap tops off the Shroud

Roof Flange—16 gauge T-304 Stainless sheet – continuous welded seam at Pedestal.

Single Speed Gray Enamel Enclosures
Model MPSD- (*XX*) / Standard NEMA 12/3 Rain Tight -Starter-Disconnects
(*Replace XX with max amp rating.)*

Model	Disconnect-Starter Description	Maximum Amp Rating
MPSD-30-R:52/12	Single Speed—240V– 30Amp-Fused W/O Panel Switch SQD 8538SCA24V03	30 amp.
MPSD-30-R-NF:52/12	Single Speed—240V– 30Amp-Non Fused W/O Panel Switch SQD 8538SCA21V03	30 amp.
MPSD-60-R:52/12	Single Speed—240V– 60Amp-Fused W/O Panel Switch SQD 8538SDA24V03	60 amp.
MPSD-60-R-NF:52/12	Single Speed—240V– 60Amp-Non Fused W/O Panel Switch SQD 8538SDA21V03	60 amp.
MPSD-30-R-S:52/12	Single Speed—240V– 30Amp-Fused W/ Panel Switch SQD 8538SCA24V03	30 amp.
MPSD-30-R-S-NF:52/12	Single Speed—240V– 30Amp-Non-Fused W/ Panel Switch QD 8538SCA21V03	30 amp.
MPSD-60-R-S:52/12	Single Speed—240V– 60Amp-Fused W/ Panel Switch SQD 8538SDA24V03	60 amp.
MPSD-60-R-S-NF:52/12	Single Speed—240V– 60Amp-Non-Fused W/ Panel Switch SQD 8538SDA21V03	60 amp.

Two Speed Gray Enamel Enclosures
Model MPSD2- (*XX*) / Standard NEMA 12/3 Rain Tight -Starter-Disconnects
(*Replace XX with max amp rating.)*

Model	Disconnect-Starter Description	Maximum Amp Rating
MPSD2-30-R-S:52/12	Dual Speed—240V– 30Amp-Fused W/O Panel Switch SQD 8810DCA2V03	30 amp
MPSD2-60-R-S:66/12	Dual Speed—240V– 60Amp-Fused W/O Panel Switch SQD 8810DDA2V03	60 amp

Under Deck Flange – Welded 14 gauge sheet metal – black painted w/ anchor bolts and trim to secure pedestal to roof structure.

Wiring may be color coded and/or taped to meet North America industry standards.
Phase A: Black
Phase B: Red
Phase C: Blue

Optional Features available:

· GFCI - Commercial grade receptacle housed in die-cast aluminum single gang weatherproof outlet box with weatherproof hinged cover plate. *Suffix-G*

· Single Speed Termination Cable / Liquid-Tight Steel Core Flexible Conduit. *Suffix-5C=5' or 10C=10' (3 Wire W/ Ground)*

· Two Speed Termination Cable / Liquid-Tight Steel Core Flexible Conduit. *Suffix-5C=5' or 10C=10' (6 Wire W/ Ground)*

· Lighting Surge Arrestor - Arrestor is mounted to base of Safety Switch. *Suffix-LSA*

· Extended stainless shroud for special applications.
(Specify in model number-6" increments. ie., -54/12)

Other Options: Upper Deck Cap- Fit for standard 12"x12"x10" curb (Field provided)

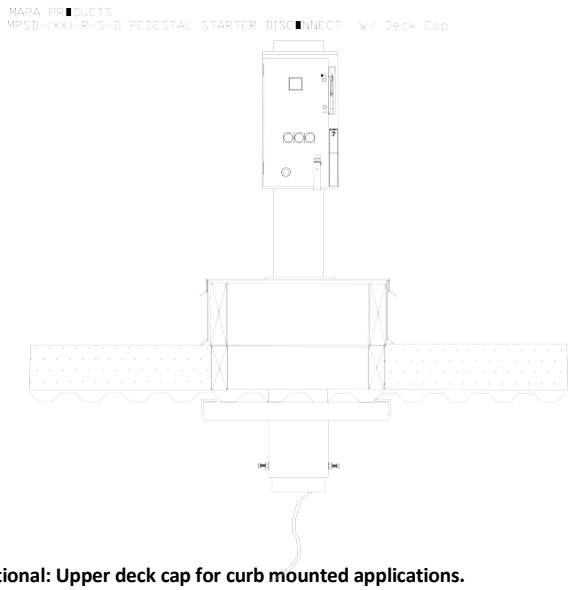

Optional: Upper deck cap for curb mounted applications.

Unpacking the Pedestal:

Parts Included:

Disconnect Assembly
Under-deck flange
Assembly Hardware
Installation Instructions

Assembly Hardware is located in a plastic bag that is attached to the underside of the under-deck flange.

Parts: 2 – ¼" X 1" set screws
4 – ¼" X 1 ½" set screws
1 – weather-tight connector
(Only when unit is provided with termination cable.)

Verify that all assembly parts are present.

Figure 1

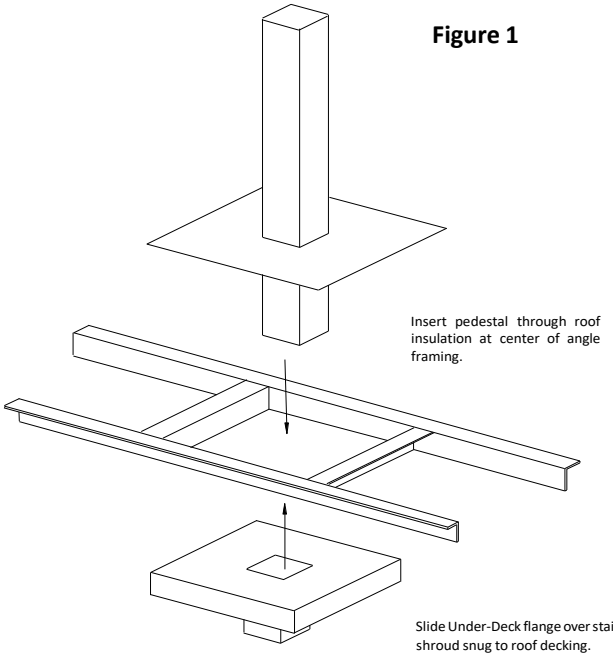

Wiring – Conduit Specifications: Standard Sizes – AWG

Amp Rating	Conductors	AWG	GND AWG	Conduit Size
30	3	10	12	1"
60	3	6	10	1 1/4"

Recommended Installation Procedures:

Support Framing: MAPA Products strongly recommend that prior to the installation of this Roof Mounted Pedestal Starter-Disconnect that a welded angle frame be installed at the bottom surface of the roof decking. This framing should be of sufficient size to permit the provided under-deck flange to slide freely yet firmly into the frame and rest firmly against its top. The framing should be of sufficient strength to prevent any dislodging of the Pedestal during normal operation.

Additionally structural bracing should be utilized where vertical sway is detected. Attachment points are provided on the pedestal

Installation Sequencing:

We recommend that the Pedestal Starter-Disconnect not be installed until the roof decking and all roof insulation is in place. A square hole should be cut in the roof insulation and deck to permit the Pedestal to pass from the roof surface through this hole to below roofline with the base resting squarely on the insulation. We do not recommend making final wiring connections to the Pedestal until all roof work associated with making the Pedestal base watertight to the roof is completed and then not until the under-deck clamp has been installed.

Installation of the Pedestal: A hole approximately five inches (5") square should be cut in the roof decking. The hole should be centered on a angle frame welded to the roof structure below the decking. Once roof insulation is in place, cut through the insulation and place the Pedestal base squarely onto the roof surface. Square the Pedestal, pointing the safety switch in the desired direction.

Refer to **Figure 1** of the Instructions.

MAPA Products, LLC.
103 C J Wise, Naples, TX 75568 Phone 903-781-6996
customerservice@mapaproducts.com

Caution should be taken to assure that the Pedestal is vertically level above the roof. We do not recommend installing the Pedestal within four feet of the edge of the roof or within three feet of other roof top equipment or on any sloping surfaces of the roof.

Installation of the Under-deck Flange: Once roofing work at the Pedestal has been completed, the under-deck flange should be installed. Slide the under-deck flange from below, over the lower portion of the Pedestal's shroud. Snug the flange securely to the deck and angle framing. Using the four (4) ¼" X 1 ½" set screws, secure the flange to the angle framing. Care should be taken to insure that the under-deck flange is firm against the bottom of the roof deck while tightening these set screws. See **Figure 2**

Next, using the two (2) ¼" X 1" set screws, securely fasten the under-deck flange to the stainless shroud.

Refer to **Figure 3** of the Instructions.

Weather Proofing the Pedestal:
This Pedestal should be flashed and made water-tight to the adjoining roof membrane according to industry standards and project specific requirements. This work should only be performed by those skilled in the roofing trade.

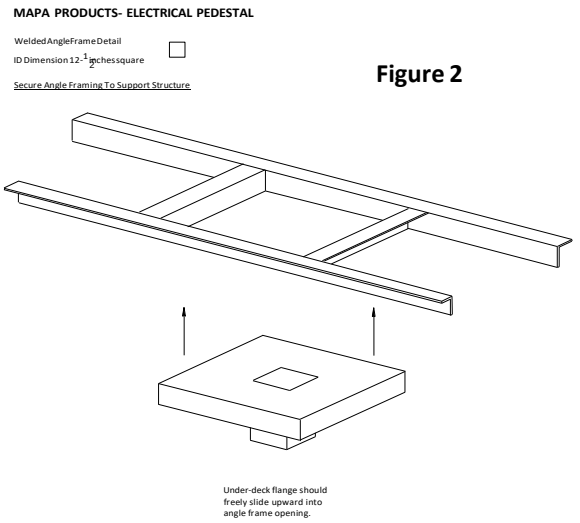

Figure 2

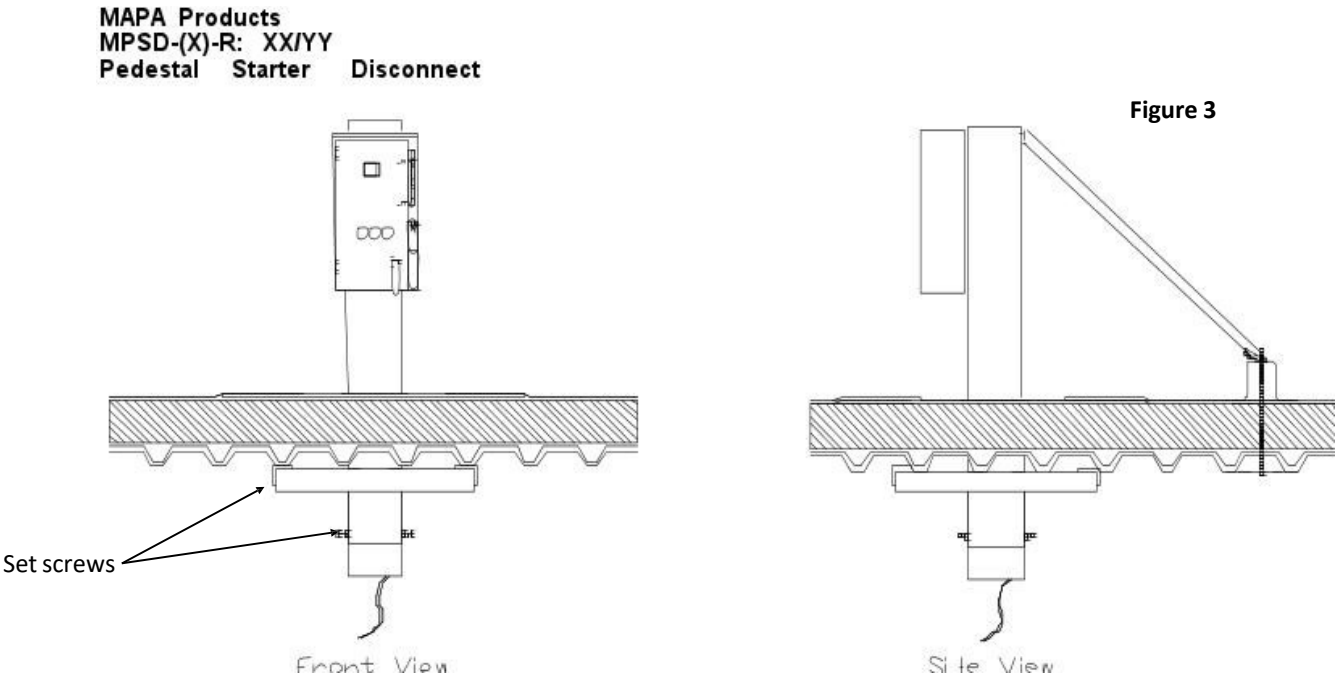

Figure 3

Installation of the Electrical Service:

Only qualified electricians licensed to perform electrical work in the jurisdiction where the Pedestal is to be installed should make wiring connections or perform service to this unit.

Connections to the Electrical Power Source:

Make connections to the service wire leads using an industry standard junction box. This box should be installed per industry standards and per local governing codes. We recommend that a junction box be installed at the wiring termination point below the roof serving the Pedestal. If a GFCI and/or Control are included in the assembly, it is recommended that separate junction boxes be used for each circuit's termination.

CAUTION: Pedestals should never be used as a means to secure safety harness attachments.

CAUTION: All local electrical codes should be followed when installing this Pedestal and connecting wiring to the unit. Verify that electrical supply is disconnected prior to connection of termination or service wiring or before performing service to the unit.

Electrical Service Test: It is recommended that a thorough test and inspection of the wiring services be performed on the completed assembly prior to placing it into service.

Terminations at the Device: Wiring terminations and conduit connections to the electrical device served by the Pedestal Disconnect should be made per local governing codes.

Fuse Selection:

Fuses are provided with this unit. For replacements; only install Duel Element Time Delay fuses that comply with the specific requirements of the safety switch manufacturer. Fuse size and ratings should conform to the requirements specified for the electrical device serviced by the Pedestal.

Control Wiring:
240-vac control wiring terminates at the base of the enclosure. 2 speed units are provided with a common and 2 load wires for connection to remotely located, field provided control relays. These load wires are marked “HIGH” and “LOW”. Single speed units are provided with common and load control wiring.

Maintenance:

A periodic test and examination of the Pedestal should be performed to assure that no damage has occurred to the unit. Immediately disconnect service to the unit and contact a factory agent if the Pedestal appears damaged or fails to operate as intended.

U**LIMITED WARRANTY**

From the date of delivery; **ISIMET/MAPA, LLC** will repair or replace any defective parts or workmanship for a period of:
(1) one year on rooftop pedestals.

Rusting, corrosion and/or material discoloration that is not detrimental to the integrity of the product is not warranted. Damage caused by incorrect installation, alteration or improper usage is not warranted. Recovery rights shall be limited to the total sum of the amounts paid for the product by the purchaser.

DISCLAIMER OF IMPLIED WARRANTY:
THERE ARE NO WARRANTIES THAT EXTEND BEYOND THE DESCRIPTION HEREIN. SELLER DISCLAIMS ANY IMPLIED WARRANTY OF MERCHANTABILITY OF THE GOODS OR OF THE FITNESS OF THE GOODS FOR ANY PURPOSE, AND BUYER AGREES THAT THE GOODS ARE SOLD “AS IS.”

LIMITS OF LIABILITY
ISIMET/MAPA, LLC liability shall be limited to costs of repair or replacement parts. Supports are not intended for usage other than those expressly described in this brochure. ISIMET/MAPA, LLC shall not be liable for damage or injury caused by the improper use of the product.