MAPA PRODUCTS®

Innovative rooftop supports since 1998

SADDLEROLLER™
Rooftop pipe support





SADDLEROLLER™

- Includes base & roller (ships fully assembled)
- Designed for gas and hydronic piping; roller allows for thermal expansion
- **Accommodates up to 3" IPS pipe**
- Easy height adjustment—optional snap-on 2" Height Extender available

Height Extender snaps on to bring total height to 4"

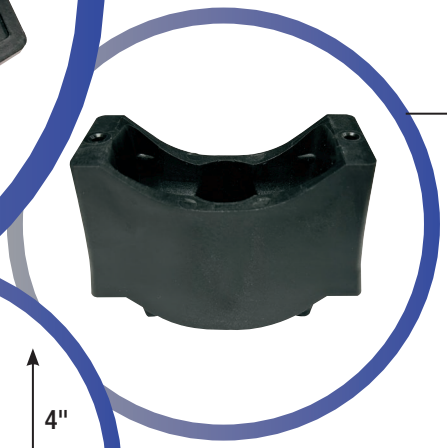



SADDLEROLLER™ with snap-on Height Extender installed

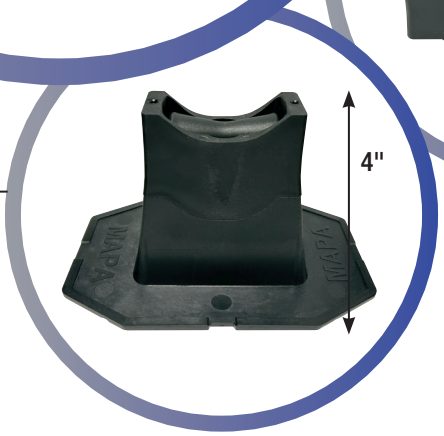

- 12 nested supports banded for easy contractor transport; 48 individual units per case
- Integrated pipe strap receptors
- Optional base pads available in standard and heavy-duty sizes
- Made of high-impact, UV-protected Nylon 6/6
- Holds up to 150 pounds
- Made in USA

LIMITED LIFETIME Warranty see website for details

MADE IN U. S. A.

Thermal expansion: the reason you need pipe supports.

Thermal expansion and contraction causes pipe to move, which can result in roof and pipe damage. The rate of thermal expansion depends upon three factors: pipe material, the length of the pipe and the temperature range, and/or the hottest and coldest temperature the pipe will be exposed to. Rooftop pipe supports protect roofs by allowing pipes to move without damaging the roof—and are required by code.

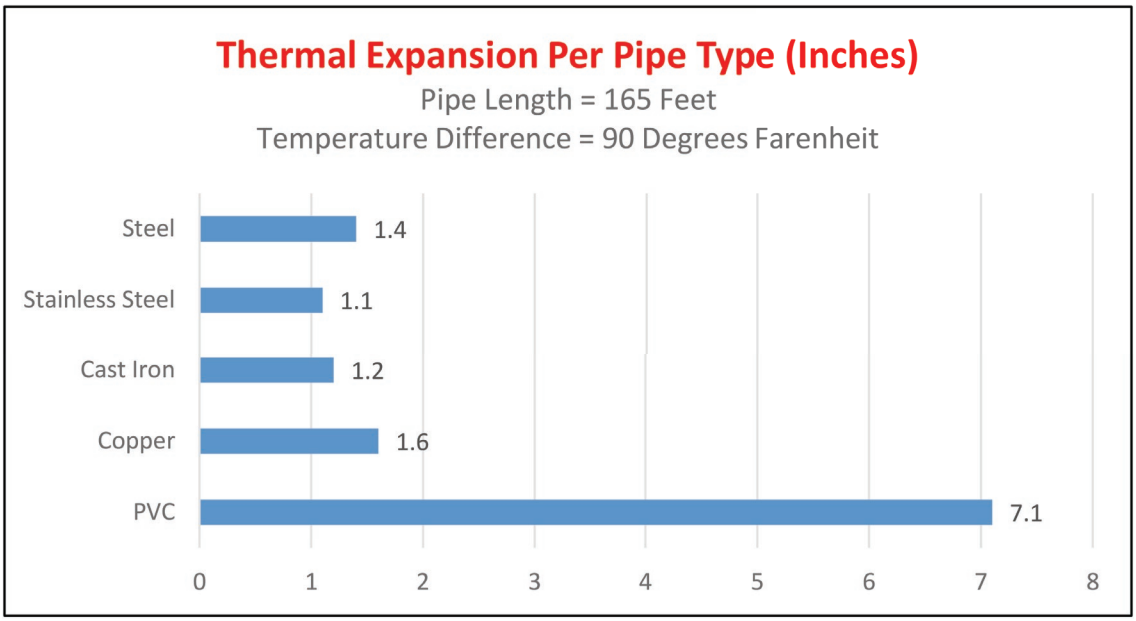





The photos at left illustrate what can happen when pipes are subjected to thermal expansion without proper pipe support.

MAPA PRODUCTS®

www.MAPAproducts.com
(903) 781-6996

Innovative rooftop supports since 1998

Patents Pending. Visit mapaproducts.com for details. © MAPA Products, LLC 2025 7/25