# MAPA PRODUCTS



**Increases in construction costs seem to always follow new and innovative techniques and products.**
**MAPA Products finds creative ways to enhance these technical improvements by providing cost-effective products to the construction industry.**

## Versatile / Practical / Affordable

**Roof Top Support Solutions**



**Plumbing Solutions**



**Electrical**



This document is copyrighted. This document may not in whole or part, be copied, duplicated, reproduced, translated, electronically stored, or reduced to machine readable form without prior written consent from **MAPA PRODUCTS, LLC**.

Although the material contained herein has been carefully reviewed, **MAPA PRODUCTS, LLC** does not warrant it to be free of errors or omissions. **MAPA PRODUCTS, LLC** reserves the right to make corrections, updates, revisions, or changes to the information contained herein. *(Refer to Catalog for entire line of MAPA Products)*

# Table of Contents

**Roof Top Pipe Support Systems.....7-27**
Single Post Supports..... 8-9
Strut Supports .....10-11
Roller Supports.....12-13
Master Base..... 14
Trapeze and Bridging Support Systems.....15-17
Equipment Support and Platforms.....18-19
Crossover and Walkway Systems..... 20-21
Pedestal Support Systems ..... 22
Structurally Attached Support Systems ..... 24-27
**Plumbing Solutions..... 29-36**
Plumbing Pedestals Overview.....31-32
MPH-24D:24/9 and MPH-24FP-24/9 Rooftop Hydrants.....33-34
MPG-Rooftop Gas Pedestal..... 35
Expansion Tank Cages ..... 36
**Electrical Solutions..... 37-45**
Electrical Pedestals Overview .....38-39
MPD Series / Pedestal Disconnects ..... 40-41
MPSD Series / Pedestal Disconnects .....42-43
MPX Series / Utility Pedestals ..... 44
**Accessories ..... 46-51**
Walk and Traffic Pads..... 47
Assemblies (Clamp, Roller and Pipe Straps)..... 48
Pipe Clamps (Stainless Steel and Nylon Snap N Strut) ..... 49
Snap N Strut Selection Chart ..... 50
MPSA(x) Structural Attachment Accessory..... 51
**Technical Data .....52-57**
Model Number Reference Chart .....53

# MAPA Products, LLC
# LIMITED LIFETIME WARRANTY

Limited Lifetime Warranty--When installed in accordance with MAPA Products installation and maintenance specifications and using only MAPA Products materials, MAPA Products, LLC warrants its support bases and assemblies to be free from defect and will repair or replace product at MAPA Products discretion. Rusting that is not detrimental to the integrity of the support is not warranted. Damage caused by incorrect installation, improper usage or improper maintenance is not warranted. Recovery rights shall be limited to the total sum of the amounts paid for the product by the purchaser.

Other Conditions of the Warranty:
MAPA Products, LLC provides no insurance against and shall not be liable for any damage found to be the consequence of the following:

- Project engineering, incorrect installations and/or flaws in standard construction practices.
- Any damage to the building, roof system, structure or surrounding area due to any act of nature.
- Neglecting to follow MAPA Products, LLC standard Installation and Maintenance guidelines.
- Neglecting to notify MAPA Products, LLC in writing within ten days of any claim against the warranty that impedes the ability of the Company to inspect the product and thereby prevent further damage.
- Any change to the buildings intended use or modifications to the roof, equipment and/or the support system.

Limits of Liability:
MAPA Products, LLC liability shall be limited to costs of repair or replacement parts. Supports are not intended for usage other than those expressly described in product catalog. MAPA Products, LLC does not perform engineering design and shall not be liable for damage or injury caused by the improper use or installation of the product.

Printed in the United States of America.
©Copyright 2024

# Roof Top Support Solutions



**In 1998, MAPA Products, LLC** introduced the first plastic based adjustable roller support system to the market; thus meeting the need for a cost effective engineered product which provides protection to the roof membrane from the effects of thermal expansion.

Since then MAPA Products has become the leader in roof top support solutions with the most complete support product line in the industry.

**MAPA Products Supports are designed to protect the roof and piping system from the effects of thermal expansion; while providing the customer with a cost-effective alternative for installing piping across a flat roof.**

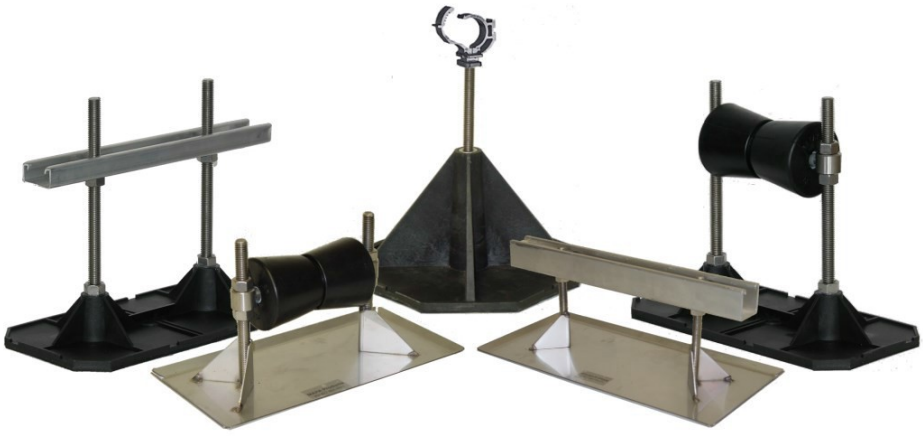

## WE HAVE YOUR SUPPORT

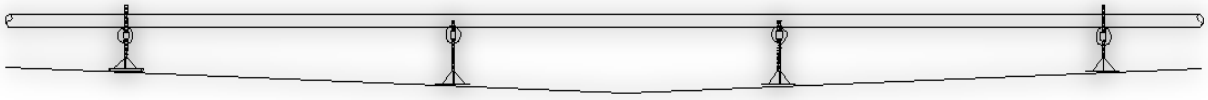

## Historically wood blocking has been used to support rooftop piping.

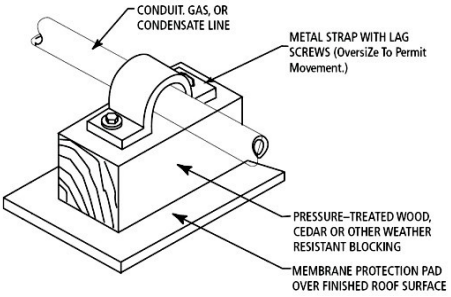


**Block supports can cause extensive dam- age to the roof through rapid deterioration and rigid strapping of the pipe to the block.**



**Specification** **Result**

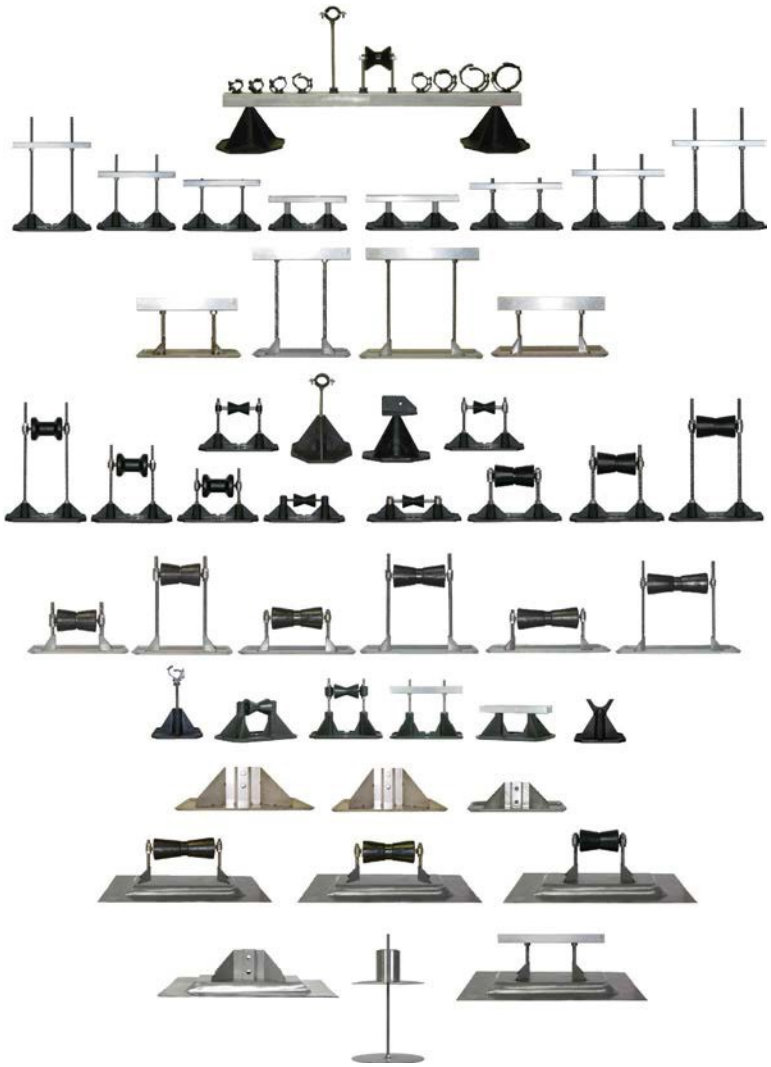

**"When alternatives for rooftop supports were "wood blocks" or expensive stain- less steel, MAPA introduced the first plastic based adjustable support for light to medium duty gas piping. This cost effective support started a design trend that revolutionized the industry."**

**Notes:**

# Roof Top Support Systems


Single Post Supports ..... 8-9

Strut Supports ..... 10-11

Roller Supports ..... 12-13

Master Base ..... 14

Trapeze and Bridging Support Systems ..... 15-17

Equipment Support and Platforms ..... 18-19

Crossover and Walkway Systems ..... 20-21

Pedestal Support Systems ..... 22

Structurally Attached Support Systems ..... 24-27


# Versatile / Practical / Affordable

# Single Post Supports:

## Typically Used for Condensate Drain Piping:

***MAPA Products supports are designed and manufactured in compliance with the International Fuel Gas Code, MSS SP-58-2002, MSS SP-69-2002 and MSS SP-127-2001where applicable for structural support systems.***

**Recommended Usage:**
Use as a pipe support stand for single piping runs installed on single ply and built-up roofs. The threaded rod assembly can be adjusted to allow piping to be installed level or when used with condensate piping, rods can be adjusted to ensure proper flow. Only the Standard Duty MS-1-(X)-A10 may be used for natural gas piping and only when thermal expansion is not a concern.

This product is designed to be used as a pipe support stand for all applications installed on single ply or built-up roofs

The adjustable support models allow piping to be installed level or tapered for gravity flow. The addition of the optional neoprene pad adhered to the base provides additional protection by separating the support from the roof membrane. All supports are available with optional MWP Series Walk Pad, a 9.2mm thick rubber pad and adhesive for "in the field" application.

**Technical Information:**
MT and MS series support bases combine the durability of a 33% reinforced fiberglass 6/6 nylon support base with an adjustable threaded rod assembly to provide an economical method of supporting a single pipe. The standard threaded rod assembly is attached to a nylon pipe clamp which is red tipped to indicate maximum extension. MX Series (Heavy-Duty) supports are manufactured from stainless steel.

**Note:**
- Maximum support spacing should not exceed 10' O.C.
- Additional supports are recommended at each change of direction, branch and at each initiation and termination of the piping run.
- Supports should be cross-braced at intervals as stated by design engineer in project specifications. Where not specified by design engineer, MAPA Products recommends that supports should be cross-braced at each end of run where the distance from roof surface to bottom of pipe exceeds 12", then at 80' intervals or where sway is detected after installation is complete.
- It is the responsibility of the installer to coordinate with the specifying engineer the necessity and/or method in which the support system should be structurally secured.



# Single Post Supports



## MT-1V

6"x6"

| Maximum Pipe Size | Vertical Adjustment | Maximum Load | Foot Print |
|---|---|---|---|
| 1.5 OD | Fixed Height 4" | 75 | 34.5 Sq.In. |



## MT-1-(*Clamp Size*)-A8

6"x6"

| Vertical Adjustment | Maximum Load | Foot Print |
|---|---|---|
| 4"-8" | 75 | 34.5 Sq.In. |

| SNS Clamp | 1216 | 2124 | 2529 | 3034 | 3538 | 4044 | 4854 | 5663 |
|---|---|---|---|---|---|---|---|---|
| Sch. 40/80 | 1/4 | 1/2 | 3/4 | 1 | NA | 1 1/4 | 1 1/2 | 2 |
| Copper | 1/2 | 3/4 | 1 | NA | 1 1/4 | 1 1/2 | 2 | NA |



## MS1-1-(*Clamp Size*)-A10 / A14 / A20

8" Octagonal Base

| Vertical Adjustment | Maximum Load | Foot Print |
|---|---|---|
| *See example below* | 75 | 54 Sq.In. |

**Available Clamp Sizes**

| SNS Clamp | 1216 | 2124 | 2529 | 3034 | 3538 | 4044 | 4854 | 5663 |
|---|---|---|---|---|---|---|---|---|
| Sch. 40/80 | 1/4 | 1/2 | 3/4 | 1 | NA | 1 1/4 | 1 1/2 | 2 |
| Copper | 1/2 | 3/4 | 1 | NA | 1 1/4 | 1 1/2 | 2 | NA |

**Example:**

Standard: MS-1-(X)-A10 : Standard height adjustable from 6"-10".

E-Series: MS-1-*(X)*-A14: Extended height adjustable from 10" - 14". EX Series: MS-1-*(X)*-A20: Extended height adjustable from 14" – 20".

(Note: EX Series available only with Stainless Steel Clamp and MWP1212 heavy duty walk pad)

**Optional Stainless Steel Clamp**:

Available Clamp Sizes: 5/8", 7/8", 1 1/8"

*Note: Removable UV Stabilized Rubber Cushion provides vibration isolation and separation of dissimilar metals. Increase pipe size by one if removed.*

## Structurally Attached Single Post Supports

***(Additional Information in Structurally Attached Section of MAPA Products catalog)***



## MX-1.375-(*Clamp Size*)-SA

| Vertical Adjustment | Maximum Load | Foot Print |
|---|---|---|
| Fixed Height 10" | 75 | 50 Sq. In. |

**Stainless Steel Clamp:**

Available Clamp Sizes: 5/8", 7/8", 1 1/8"

*Note: Removable UV Stabilized Rubber Cushion provides vibration isolation and separation of dissimilar metals. Increase pipe size by one if removed.*

The MAPA Products structural restraint systems may be utilized in areas where seismic or high wind zones are of concern and where structural design allows for system loads at attachment points.

The MX-1(X)-SA Structurally Attached Single Post Supports is a stainless steel structural single post support with a standard 4" ATR riser with a 6" high by 4" diameter base and a 10" X 10" flange with rounded corners. It is available with a 6" ATR riser and SS pipe clamp to be used as a structural condensate support. This will provide 12" clearance from roof surface.

# Strut Supports

## Typically Used for Electrical Conduit and Refrigeration Line Sets:

***MAPA Products supports are designed and manufactured in compliance with the International Fuel Gas Code, MSS SP-58-2002, MSS SP-69-2002 and MSS SP-127-2001where applicable for structural support systems.***

**Recommended Usage:**
This product is designed to be used as a pipe support stand for all conduit, refrigeration and natural gas piping applications installed on single ply or built-up roofs. When utilized within the recommended loading limits the strut supports are recommended for securing single or multiple line sets when thermal expansion is not a concern.

The adjustable support models allow piping to be installed level across tapered roofs. The addition of the optional neoprene pad adhered to the base provides additional protection by separating the support from the roof membrane. All supports are available with optional MWP Series Walk Pad, a 9.2mm thick rubber pad and adhesive for "in the field" application.

The HA version of this strut support provides an adjustable rod, strut assembly and band hanger to cradle the piping while allowing for greater vertical adjustability.

Strut Supports are available as a structurally attached model. The supports may be utilized in areas where seismic or high wind zones are of concern and where structural design allows for system loads at attachment points. MAPA Products Structurally Attached Supports provide a secure weatherproof penetration of the roof deck. Refer to additional information in the "Structurally Attached" section of the product catalog.

**Note:**
- Maximum support spacing should not exceed 10' O.C.
- Additional supports are recommended at each change of direction, branch and at each initiation and termination of the piping run.
- Supports should be cross-braced at intervals as stated by design engineer in project specifications. Where not specified by design engineer, MAPA Products recommends that supports should be cross-braced at each end of run where the distance from roof surface to bottom of pipe exceeds 12", then at 80' intervals or where sway is detected after installation is complete
- It is the responsibility of the installer to coordinate with the specifying engineer the necessity and/or method in which the support system should be structurally secured.

**Technical Information:**
MT and MS Series supports are manufactured from a nylon base with aluminum 1 5/8" shallow strut, while the MX Series supports use grade 304 stainless steel for the base material along with a heavier 1 5/8" square aluminum strut (Optional: 1 5/8" Galvanized strut.); A-Strut Series supports are manufactured as an extruded aluminum base with integrated 1 5/8" shallow strut available in lengths from 6 inches up to 120 inches. All strut support models are assembled with stainless steel hardware.



# Strut Support Model Data Table

| Model Number | Aluminum Strut Size (Inches) | Maximum Load (Pounds) | Maximum Vertical Adjustability (Inches) | Base Dimension (Inches) | Foot Print (Sq.In.) |
|---|---|---|---|---|---|
| **A-Strut Series Aluminum Freestanding / Non-penetrating Strut Supports** | | | | | |
| ***Extruded aluminum design w/ integrated 1 5/8" strut. Load factor of 5lbs PSI*** | | | | | |
| ***New Product*** | | | | | |
| *MA-6SF4 | 6 | 75 | * 4 | 5" X 6" | 30 |
| *MA-8SF4 | 8 | 100 | * 4 | 5" X 8" | 40 |
| *MA-10SF4 | 10 | 250 | * 4 | 5" X 10" | 50 |
| *MA-12SF4 | 12 | 300 | * 4 | 5" X 12" | 60 |
| **Freestanding / Non-penetrating Strut Supports** | | | | | |
| * MT-8SF4 | 8 | 110 | * 4 | 5" X 8" | 40 |
| MT-8SA6 | 8 | 110 | 6 | 5" X 8" | 40 |
| MS-10SA8 | 10 | 140 | 8 | 5" X 10" | 50 |
| MS-10SA10 | 10 | 140 | 10 | 5" X 10" | 50 |
| MS-10SA14 | 10 | 140 | 14 | 5" X 10" | 50 |
| MS-12SA8 | 12 | 165 | 8 | 6" X 12" | 72 |
| MS-12SA10 | 12 | 165 | 10 | 6" X 12" | 72 |
| MS-12SA14 | 12 | 165 | 14 | 6" X 12" | 72 |
| MX-18SA6 | 18 | 250 | 6 | 8" X 18" | 144 |
| MX-18SA18 | 18 | 250 | 18 | 8" X 18" | 144 |
| MX-20SA6 | 20 | 280 | 6 | 8" X 20" | 160 |
| MX-20SA18 | 20 | 280 | 18 | 8" X 20" | 160 |
| **Structurally Attached Strut Supports** ***(Additional Information in Structurally Attached Section of MAPA Products catalog)*** | | | | | |
| MX-14SA9-SA | 14 | 250 | 9 | 84 | |

*- Denotes Fixed Height Support

Where installation height exceeds 12" refer to MAPA Products
***"Recommended Installation Guidelines"***

- *Aluminum strut resists corrosion.*
- *Stainless Steel Hardware.*
- *Strut width from 6" to 20".*
- *Additional heights available on Nylon Supports up to 14".*
- *Maximum pipe size based upon load and spacing calculations for usual and customary pipe sizes.*
- *Weight limits are established by the contact area of the support to roof surface; with a maximum load per square inch of 5 lbs.*
- *SA (Structurally Attached Supports) where structural blocking is utilized; load is transferred directly to the structure; thereby increasing the allowable load, as approved by the structural engineer, any increased loading should not exceed 250 lbs.*

# Roller Supports

## Typically Used for Mechanical and Gas Piping:

***MAPA Products supports are designed and manufactured in compliance with the International Fuel Gas Code, MSS SP-58-2002, MSS SP-69-2002 and MSS SP-127-2001where applicable for structural support systems.***

**Recommended Usage:**
This product is designed to be used as a pipe support stand for all plumbing and mechanical piping applications installed on single ply or built-up roofs. When utilized within the recommended loading limits the rubber roller cradles the piping while allowing it the freedom of movement necessary due to thermal expansion of the piping system; thus protecting the roof from the abrasive effects that other fixed types of support permit.

The adjustable support models allow piping to be installed level across tapered roofs. The addition of the optional neoprene pad adhered to the base provides additional protection by separating the support from the roof membrane. All supports are available with optional MWP Series Walk Pad, a 9.2mm thick rubber pad and adhesive for "in the field" application. (See Accessories Section of List Price Guide)

Roller Supports are available as a structurally attached model. The supports may be utilized in areas where seismic or high wind zones are of concern and where structural design allows for system loads at attachment points. MAPA Products Structurally Attached Supports provide a secure weatherproof penetration of the roof deck. Refer to additional information in the "Structurally Attached" section of the product catalog.

**Note:**

- Maximum support spacing should not exceed 10' O.C.
- Additional supports are recommended at each change of direction, branch and at each initiation and termination of the piping run.
- Supports should be cross-braced at intervals as stated by design engineer in project specifications. Where not specified by design engineer, MAPA Products recommends that supports should be cross-braced at each end of run where the distance from roof surface to bottom of pipe exceeds 12", then at 80' intervals or where sway is detected after installation is complete

**Technical Information:**
MT and MS series support bases are manufactured from nylon, MX Series (Heavy-Duty) supports are manufactured from grade 304 stainless steel; all roller support models use stainless steel hardware and a durable SBR Hard Cast Rubber Roller w/Nylon Bushing assembly with stainless steel shaft.



# Roller Support Model Data Table

| Model Number | Maximum Pipe Size (IPS) | Maximum Load (Pounds) | Maximum Vertical Adjustability (Inches) | Base Dimension (Inches) | Foot Print (Sq.In.) |
|---|---|---|---|---|---|
| **Freestanding / Non-penetrating Roller Supports** | | | | | |
| * MT-2RF4 | 2 | 110 | * 4 | 5” x 8” | 40 |
| MT-2RA6 | 2 | 110 | 6 | 5” x 8” | 40 |
| MS-3RA8 | 3 | 140 | 8 | 5” x 10” | 50 |
| MS-3RA10 | 3 | 140 | 10 | 5” x 10” | 50 |
| MS-3RA12 | 3 | 140 | 12 | 5” x 10” | 50 |
| MS-4RA8 | 4 | 140 | 8 | 5” x10” | 50 |
| MS-4RA10 | 4 | 140 | 10 | 5” x 10” | 50 |
| MS-4RA14 | 4 | 140 | 14 | 5” x 10” | 50 |
| MS-5RA8 | 5 | 165 | 8 | 6” x 12” | 72 |
| MS-5RA10 | 5 | 165 | 10 | 6” x 12” | 72 |
| MS-5RA14 | 5 | 165 | 14 | 6” x 12” | 72 |
| MX-6RA6 | 6 | 195 | 6 | 6” x 14” | 84 |
| MX-6RA14 | 6 | 195 | 14 | 6” x 14” | 84 |
| **Structurally Attached Roller Supports** *(Additional Information in Structurally Attached Section of MAPA Products catalog)* | | | | | |
| MX-5RA9-SA | 5 | 140 | 9 | NA | 50 |

*- Denotes Fixed Height Support

Where installation height exceeds 12” refer to MAPA Products
***“Recommended Installation Guidelines”***

- *Additional heights available on Nylon Supports up to 14”.*
- *Maximum pipe size based upon load and spacing calculations for usual and customary pipe sizes.*
- *Weight limits are established by the contact area of the support to roof surface; with a maximum load per square inch of 5 lbs.*
- *SA (Structurally Attached Supports) where structural blocking is utilized; load is transferred directly to the structure; thereby increasing the allowable load, as approved by the structural engineer, any* increased loading should not exceed 250 lbs.

# MASTER BASE

***MAPA Products supports are designed and manufactured in compliance with the International Fuel Gas Code, MSS SP-58-2002, MSS SP-69-2002 and MSS SP-127-2001where applicable for structural support systems.***

**Recommended Usage:**
The MAPA Master Base is designed as a cost-effective heavy-duty platform from which a multitude of support configurations may be manufactured. This adaptability provides an effective means to support single or multiple piping runs, conduit, cabling and rooftop duct systems; as well as equipment supports, maintenance platforms and crossover systems. *(See additional details included in product catalog)*

These bases have notched corners to prevent water retention and rolled edges to prevent incidental damage to roof surface. Product includes the necessary hardware for strut/tubing attachment to the base.

Bases are designed to support loads ranging from 250 up to 800 pounds. Weight limits are established by the contact area of the support to roof surface; with a maximum load per square inch of approximately 2 PSI.

Our recommended optional 9.2mm thick rubber walk pad may be adhered to the base providing additional protection for the roof. Supports should be cross-braced at intervals as stated by design engineer in project specifications. Where not specified by design engineer, please refer to MAPA Products "Recommended Installation Guidelines."

Where applicable the contractor may utilize materials commonly found in their inventory to fabricate the framing to meet the specifications of the job.

The Master Base is available as a structurally attached model. The MX-146C-SA may be utilized in are- as where seismic or high wind zones are of concern and where structural design allows for system loads at attachment points. MAPA Products Structurally Attached Supports provide a secure weatherproof penetration of the roof deck by which a variety of support and restraint options become available. Refer to additional information in the "Structurally Attached" section of the product catalog.

**Technical Information:**
MB and MX Series bases are manufactured from grade 304 stainless steel. The standard welded support flange accepts 1-5/8" square strut but is available for telescoping strut and 2-1/2" IPS Tubing. Support base and framing configuration may be factory modified to meet design criteria for sloped roof sur- faces.



## Heavy Duty-Trapeze & Bridging Supports Systems



## Platforms and Walkways / Crossover Systems / Equipment Support Systems

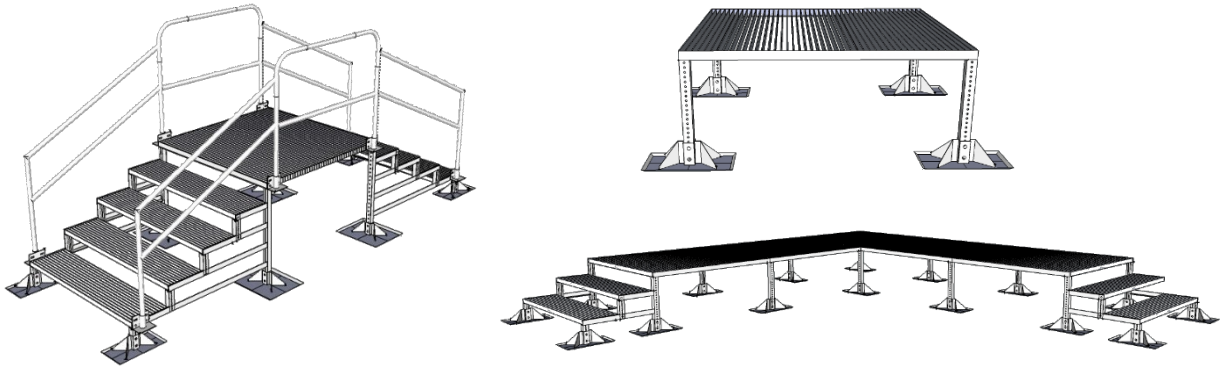

# Master Base Support Model Data Table:

**Freestanding / Non-penetrating Supports**

| Model Number | Maximum Load (Pounds) | Foot Print (Sq. In.) | Composition 304- Stainless Steel, Gauge |
|---|---|---|---|
| MB-815 | 250 | 120 | 18 |
| M-1010 | 250 | 100 | 18 |
| MB-1416 | 500 | 224 | 16 |
| MB-1616 | 500 | 256 | 16 |
| MB-2020 | 800 | 400 | 16 |
| ***(Additional Information in Structurally Attached Section of MAPA Products catalog)*** | | | |
| MB-146C-SA | 500 | 84 | 18 |

- *SA (Structurally Attached Supports) where structural blocking is utilized; load is transferred directly to the structure; thereby increasing the allowable load, as approved by the structural engineer, any increased loading should not exceed 500 lbs.*

# Trapeze & Bridging Supports Systems

**Typically used for duct work and multiple piping systems:**

***MAPA Products supports are designed and manufactured in compliance with the International Fuel Gas Code, MSS SP-58-2002, MSS SP-69-2002 and MSS SP-127-2001where applicable for structural support systems.***

**Recommend Use**

The MAPA Trapeze and Bridging Systems are designed as a systems from which a multitude of sup- port configurations may be manufactured. This adaptability provides an effective means to support single or multiple piping runs, conduit, cabling and duct systems; as well as equipment supports, maintenance platforms and crossover systems. *(See additional details included in product catalog)*

A variety of fixed, as well as adjustable assemblies, utilizing our heavy-duty stainless steel bases or our economical nylon bases are available to provide support solutions for any project.

As a structurally attached option. The MB-146C-SA Base and /or the MX-1 (X)-SA may be utilized in areas where seismic or high wind zones are of concern and where structural design allows for system loads at attachment points. MAPA Products Structurally Attached Supports provide a secure weather- proof penetration of the roof deck by which a variety of support and restraint options become available. Refer to additional information in the "Structurally Attached" section of the product catalog.



**Technical Information:**

Trapeze Support Systems utilize the Master Base as the support base, typically 1-5/8" slotted strut for columns and beams (based upon loading), and Galvanized or Stainless Steel hardware as necessary. Clevis assemblies may be specified as standard or roller.

Heavy-Duty Bridging Systems utilize the Master Base as the support base, typically 1-5/8" slotted strut for columns and beams (based upon loading), and Galvanized or Stainless Steel hardware as necessary.

- Optionally units may be manufactured utilizing telescoping strut or 2-1/2" IPS Tubing (as available for base option)

Standard duty Bridging Systems utilize the MAPA 8"x8" octagonal nylon base upon which is attached to a 2',3',4',5' or 6' section of 1-5/8 solid aluminum strut. These units are fixed height of 7" and have a load capacity of 300 lbs. for 2' and 3' and 450 lbs. for 4'-6' sections.

# Trapeze & Bridging Supports Systems

**Typically used for single and multiple piping systems:**

## MAPA Big Roller Pipe Support



**Recommended Usage:**
For piping installed on single ply and built-up roofs; use as a non-penetrating, free standing pipe support stand for all piping applications within the recommended weight limit. The Large Roller Support is designed for large diameter piping that will allow for thermal expansion and contraction of the piping system. Included spacers will prevent the pipe from moving laterally causing disruption to the overall piping system.

**Features:** Fully Assembled Pipe Support that ships flat by rotating bases. OD dimensions are 24.5" W X 32.5" H X 21" Clear with and adjustment factor of 11". Support beam is anchored by included U-Bolts to provide a stable mount for a variety of piping application. Long narrow bases that will allow for running pipe during installation without tipping support.

**Standard Composition:**
Flat area of Support Base is 62.5 $in^2$ molded Heavy Duty Nylon to accept 2 ½" IPS; Flat area per support is 125 $in^2$
Support Beam and Vertical Posts are 2 ½" Galvanized IPS w/ Pipe Guides

**Included Hardware**: Stainless Steel U-Bolts, Nuts and Washers as necessary for tubing attachment to base.

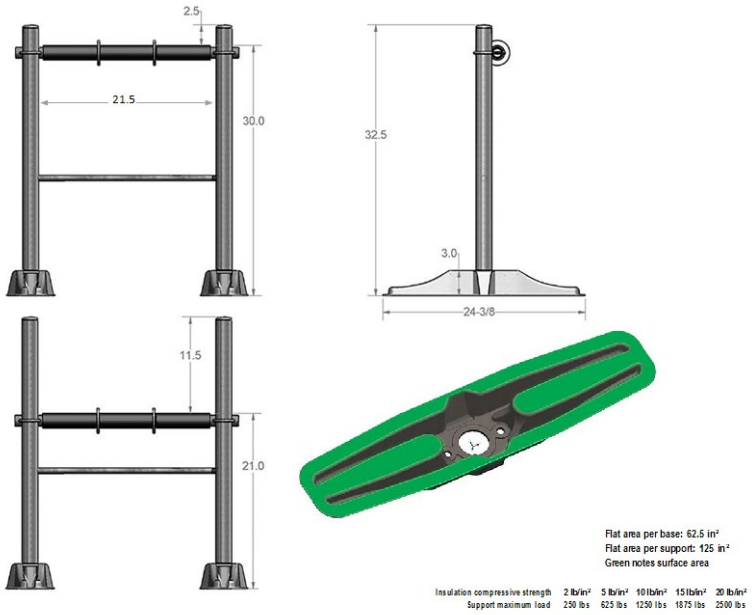


***MAPA Products Supports are designed and manufactured in accordance with MSS SP-58-2002 and MSS SP-69-2002.***
*Refer to MAPA Products "Recommended Installation Guidelines" for standard installation and spacing recommendations.*

# Equipment Supports and Platforms

**Typically used for rooftop equipment and junction boxes**

***MAPA Products supports are designed and manufactured in compliance with the International Fuel Gas Code, MSS SP-58-2002, MSS SP-69-2002 and MSS SP-127-2001where applicable for structural support systems.***

MAPA Products Equipment Supports and Support Systems are available for heavy-duty (stainless steel base) or general duty (nylon base) applications. The standard design is intended to be a freestanding / non-penetrating system that provides support for rooftop equipment within their designated category.

As a structurally attached option, the MX-146C-SA Base and /or the MX-1 (X)-SA may be utilized in areas where seismic or high wind zones are of concern and where structural design allows for system loads at attachment points. MAPA Products Structurally Attached Supports provide a secure weather- proof penetration of the roof deck by which a variety of support and restraint options become available. Refer to additional information in the "Structurally Attached" section of the product catalog.

The MS-1C corner-mounted base provides an economical method of supporting roof mounted equipment. The non-adjustable base assembly is manufactured from a fiberglass reinforced 6/6 Nylon with a rubberized protective coated metal corner assembly which is then covered with a neoprene pad. An optional neoprene pad adhered to the bottom of the base provides additional protection for the roof.



**Optional: MS-1C4**

Support Frames for vibrating equipment use four (4) MS-1 Series Bases attached directly to the angle frame with MWP 1212 – 9.2mm walk pads.

**Technical Information:**

Standard Duty Equipment Support Systems utilize the MAPA 8"x8" octagonal nylon base with angle framing. These units are fixed height of 6" and have a load capacity of 600 lbs.



The MB-1010 or MB-1616 is a Stainless Steel Heavy Duty support base used for various types of equipment platforms, walkways and crossover systems. When used as an equipment support, it is available with either a corner or side bracket.

**Technical Information:**

Heavy Duty Equipment Support Systems utilize the Master Base as the support base, either 1 5/8" slotted strut or telescoping strut for columns, angle frame platforms with 12" Galvanized step planking for the surface. Galvanized or Stainless Steel hardware as necessary. Maximum height varies by model and may be 18", 24" or 36".

# Equipment Supports and Platforms

The following standard information is necessary for quotation and/or production of the MAPA Equipment Support Systems:

- Free standing system or structurally attached base design.
- Equipment type, Dimensional and Load Data.
- Desired platform dimensions. Width and Depth.
- Platform style, open rail, expanded metal etc.
- Necessary vertical clearance from roof surface to top of platform.

Platform height not to exceed 24" without engineer and manufacturer approval.
Adjustable supports are manufactured with telescoping strut.

**Note:**

- Our recommended optional 9.2mm thick rubber walk pad may be adhered to the base providing additional protection for the roof.
- It is the responsibility of the installer to coordinate with the specifying engineer the necessity and/or method in which the support system should be structurally secured.

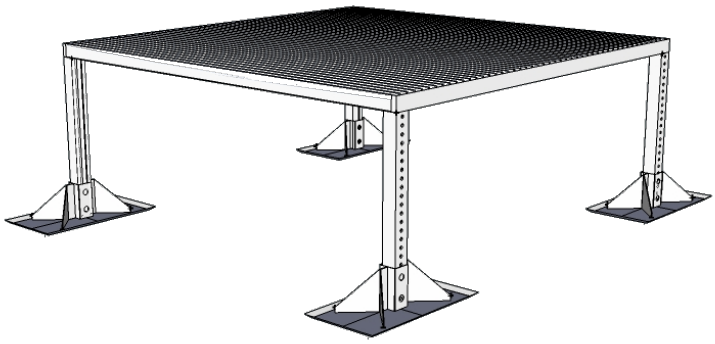

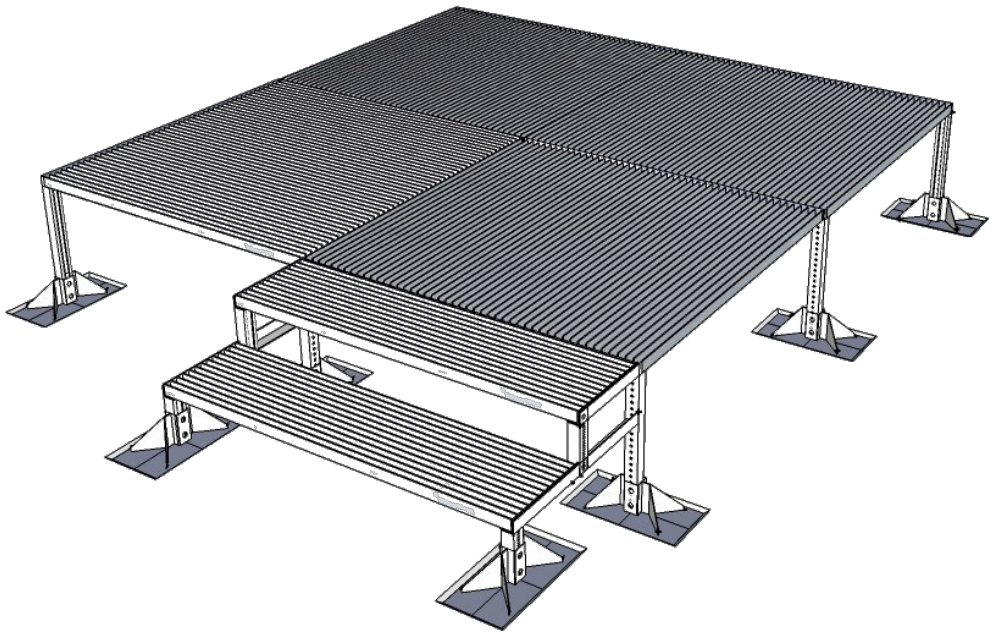

# Crossover and Walkway Systems

MAPA Products rooftop walkway and crossover systems are designed to enhance the safety, longevity and appearance of the rooftop. The standard design is intended to be a freestanding / non- penetrating system that provides access to typical maintenance needs on any roof system. In cases were structural attachment is necessary the MX-146C-SA may be utilized to secure the system.

The Master Base Assembly is designed for use with various support. The MB-815 is the standard base for a platform, walkway and crossover applications; where a larger footprint is desired the MB-1010, MB-1416, MB-1616 or MB-2020 may be utilized. A recommended optional 9.2mm thick rubber walk pad may be adhered to the base to provide additional protection for the roof membrane.

**Technical Details**

**Base Features:** Rolled edges to prevent incidental damage to roof surface. Grade 304 stainless steel unless specified otherwise. Stainless Steel Bolts, Nuts, Washers for strut attachment to base. MAPA Master Base with welded support flange for reception of square strut. Maximum load in accordance with base model. See additional information in the “Master Base” section of the product catalog. Rise and Run construction is provided by either 1 5/8” slotted strut or telescoping strut for columns, angle frame platforms with 12" Galvanized step planking for the surface. Galvanized or Stainless Steel hardware as necessary.

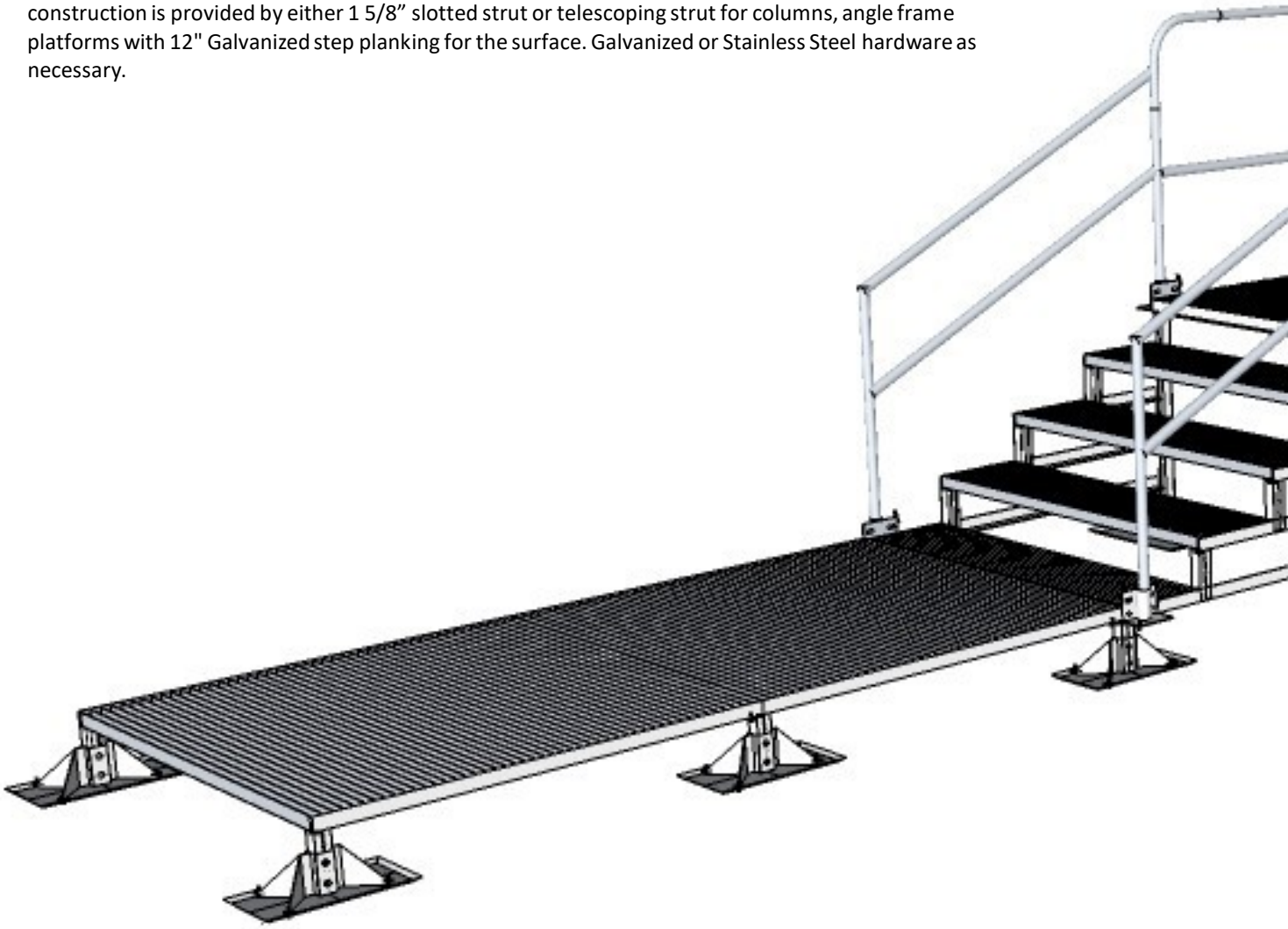

# Crossover and Walkway Systems

Crossover and Walkway Systems; the following standard information is necessary for quotation and/or production of the system:

- Free standing system or structurally attached base design.
- Dimensional and Load Data.
- Platform style, open rail, expanded metal etc.
- Necessary vertical clearance from roof surface to top of platform.
- Step and ramp plans.
- Handrail

Platform height not to exceed 24" without engineer and manufacturer approval.

**Contact manufacturer for complete quotation and submittal package.**

*(Additional details may be necessary prior to receiving manufacturer quotation.)*

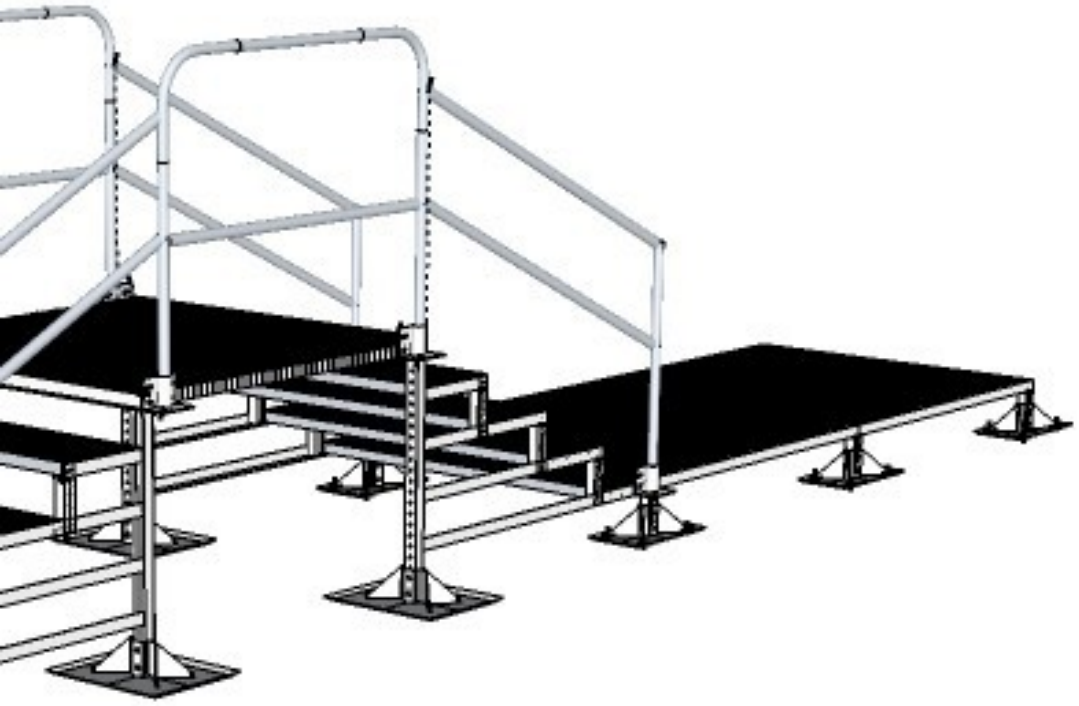

**Note:**

- Our recommended optional 9.2mm thick rubber walk pad may be adhered to the base providing additional protection for the roof.
- It is the responsibility of the installer to coordinate with the specifying engineer the necessity and/ or method in which the support system should be structurally secured.

# Pedestal Support Systems

## MPS-(x) / Structural Stainless Steel Pedestals

**Pedestal for Roof Mounted Load Centers and Trapeze Supports**

Where rooftop services require structural support; the Utility Pedestal may also be utilized. These MPS-(X):36/12 Series Pedestals utilize a heavier and as necessary extended stainless steel tubing (11 gauge and up to seven feet in overall length), and are typically used to construct trapeze supports systems, curbs and equipment supports systems.

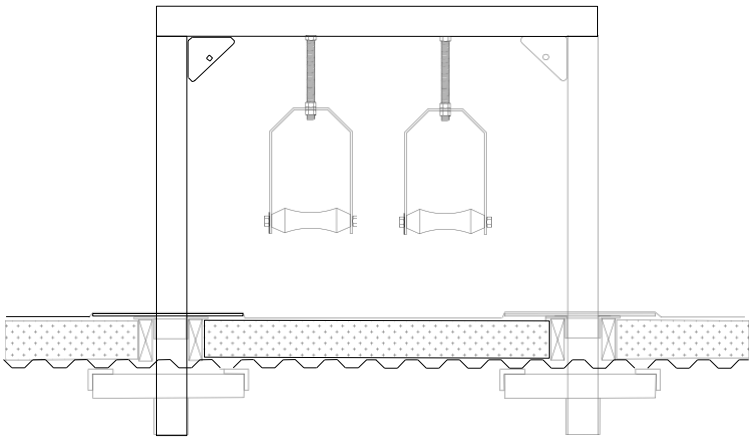

**HD Structural Trapeze**



Additionally, devising a structural platform between the two Pedestals will permit roof mounted electrical equipment such as a transformer to be mounted securely above the roof surface. Contact MAPA for assistance in devising alternative applications or uses of this Pedestal.

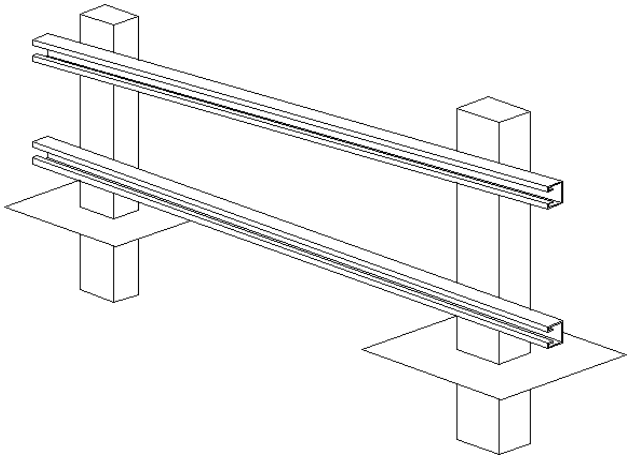

Pedestals, when installed in parallel, will provide a suitable support structure for mounting of an electrical load center or other electrical devices or junction boxes. Structural support members such as strut or angle iron can be field affixed to the exterior of the Pedestal by using common fastening hard- ware and a weatherproof adhesive/sealant.

Upon these structural members, weather-tight load centers can be installed, with service conduit then extending outward to the various roof mounted equipment. MAPA recommends using a Strut Sup- port or the MAPA Bridge Assemblies to support these conduits.

**Note**: Pedestals are custom fabricated for specific project requirements and typically require a four (4) week lead-time after product submittal approval.

**Notes:**

# Structurally Attached Support Systems

***MAPA Products supports are designed and manufactured in compliance with the International Fuel Gas Code, MSS SP-58-2002, MSS SP-69-2002 and MSS SP-127-2001where applicable for structural support systems.***

The structural support series is designed as a platform from which various support configurations may be manufactured for an effective means to positively secured service and supports directly to the roof deck. Typical uses would include rooftop piping and conduit, chilled water and return drain piping, ducting systems, roof mounted equipment platforms and crossover systems.

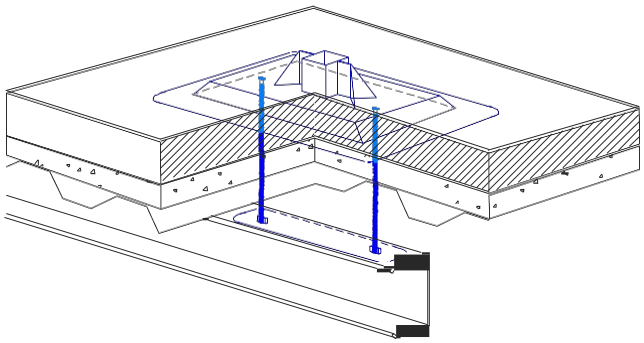

Supports may be utilized in areas where seismic or high wind zones are of concern and where structural design allows for system loads at attachment points.

Where design does not stipulate the support structure to be secured to the roof deck, MAPA Products recommends the use of our standard non-penetrating Master Base Platform with the MX-1.*xxx*-SA single post base and bracing assemblies.

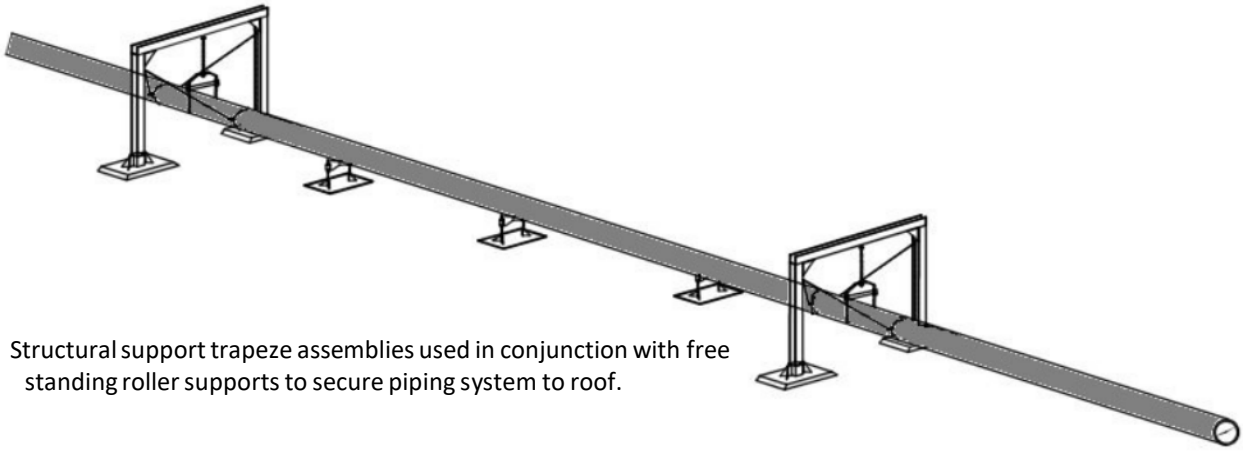

Structural support trapeze assemblies used in conjunction with free standing roller supports to secure piping system to roof.

**Technical Data**

MAPA Products structural support bases are 18 gauge, 304 stainless steel with all stainless steel hard- ware; typical base features are a raised deck with rolled edges and continuously welded seams to pro- vide no surface penetrations to the unit. Attachment of the base is accomplished with ATR shaft(s) which penetrate the roof deck and are attached to either a structural member or the provided steel under deck plate with appropriate fasteners.

Single post designs feature a standard 4" diameter by 6" high shroud which is available with 3/8", 1/2" or 3/4" ATR mounting rods providing a 4" attachment stud above the shroud or as a single post pipe sup- port assembly with rubber grommet / stainless steel clamp assembly sized as specified for the application.

Trapeze assemblies are manufactured from 1-5/8" sq. slotted strut, brackets and hardware; all hot dipped Galvanized and provided with the appropriated hardware to mount the structure to the bases.

The detail illustrates a typical support application securely mounted to the roof deck using MAPA Products structural support bases. Hardware, strut and hangers are available as indicated by specification.

Additional sway and seismic cable bracing assemblies are attached to the strut verticals and anchored to the roof deck by means of an MX-1.*xxx*- SA Series single post base.

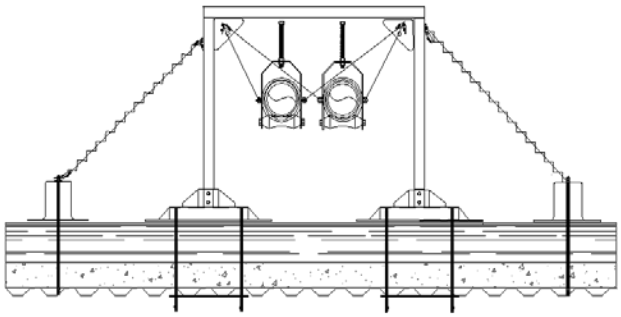

It is recommended that these enhancements be considered where the specifying engineer determines that the specific zone, code and/or standard pertaining to the project would require the additional bracing.

MAPA Products does not perform engineering design; the structural engineer is responsible for confirming that the structure upon which supports are installed is designed in accordance with accepted design codes and standards which allow for the installation of rooftop equipment and piping. Further MAPA Products shall not be liable for damage or injury caused by the improper use or installation of the product.

## Design Criteria:

Information is provided as reference for the design engineer. Maximum weight limits provided for individual models is based upon the generally associated typical usage of the support. Every project pro- vides its own unique challenges when designing for seismic and high wind forces. Design should meet accepted governing codes for these forces within a specific zone.

For challenges where project design requires custom fabrication for greater adjustability, increased elevations or greater weight loads, additional flanges, material changes, etc. may be incorporated into the design. The project engineer is encouraged to contact MAPA Products for support in these situations.

In all cases the information provided by the design engineer and/or the roofing material manufacturer should supersede the recommendations made within this document. Where conflicting procedures occur, always consult the engineer of record for final determination.

**Engineering Data**

| | Resisting Moment | Shear | Tension | Pipe OD (Inches) | Height Center Line OD Pipe (Inches) | Spacing (Feet) | Safety Factor |
|---|---|---|---|---|---|---|---|
| MX-1.375-SA | 16.50 ft-lbs | 1000 lbs | 2200 lbs | 1/2 | 6 | 8.5 | 1.667 |
| | | | | 3/4 | 6 | 6.7 | 1.667 |
| | | | | 1 | 6 | 5.4 | 1.667 |
| | | | | 1-1/4 | 6 | 4.5 | 1.667 |
| | | | | 1-1/2 | 6 | 3.6 | 1.667 |
| | | | | 2 | 6 | 3.0 | 1.667 |
| MX-1.500-SA | 39.50 ft-lbs | 1960 lbs | 3900 lbs | NA | NA | NA | 1.667 |
| MX-1.750-SA | 133.46 ft-lbs | 4400 lbs | 8800 lbs | NA | NA | NA | 1.667 |
| MB-146C-SA w/ 3/8" Structural Attachment | | | | 60' / 150 mph Qz=56.3psf | | | |
| | | | | 3" | | | 8.04 |
| | | | | 4" | | | 6.11 |
| | | | | 6" | | | 4.02 |

**Note:** 1.667 safety factor is normal when using AISC Steel Manual

# Structurally Attached Support Systems

***MAPA Products supports are designed and manufactured in compliance with the International Fuel Gas Code, MSS SP-58-2002, MSS SP-69-2002 and MSS SP-127-2001where applicable for structural support systems.***

## MX -1.*(xxx)*-SA / Single Post Structural Support Base

**Recommended Usage:**

Where a single post design is applicable the MX-1.*xxx*-SA Series Base provides a secure weatherproof penetration of the roof deck by which a variety of support and restraint options become available.



The structural single post support is designed as a heavy-duty platform from which a multitude of support configurations may be manufactured. This adaptability provides an effective means to support single or multiple piping runs, conduit, cabling and roof- top duct systems. As well as equipment support, maintenance platforms and cross- over systems. *(See additional details included in product catalog)*

Weight limits are established by the contact area of the support to roof structure. Supports should be cross-braced at intervals as stated by design engineer in project specifications. Where not specified by design engineer, please refer to MAPA Products "Recommended Installation Guidelines."

Typical configurations may include:



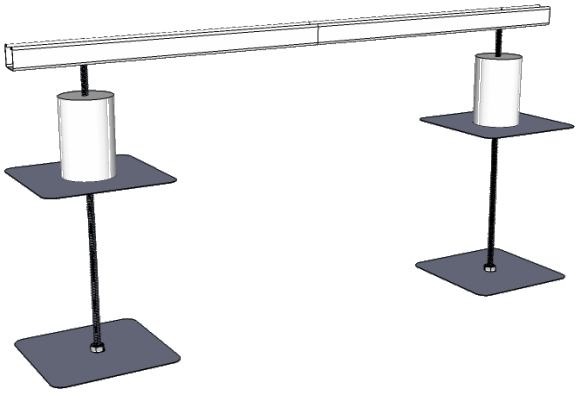



**Note:**

- Maximum support spacing is based on the requirements for specific installation zones.
- Additional supports are recommended at each change of direction, branch and at each initiation and termination of the piping run.
- Supports should be cross-braced at intervals as stated by design engineer in project specifications. Where not specified by design engineer, MAPA Products recommends that supports should be cross-braced at each end of run where the distance from roof surface to bottom of pipe exceeds 12", then at 80' intervals or where sway is detected after installation is complete

**Technical Data**

MAPA Products single post structural supports are available with 3/8", 1/2"and 3/4" ATR mounting rods providing a 4" attachment stud above the shroud or as a single post pipe support assembly sized as specified for the application. The standard 4" diameter by 6" high shroud is constructed of grade 304-18 gauge stainless steel attached to a 10" X 10" flange with rounded corners, all seams are continuously welded, an ATR shaft continues through the support and penetrates the roof deck where it is then attached to either a structural member or the provided 10" X 10" 14 gauge primed steel plate with appropriate fasteners; thus positively anchoring the support to the roof deck.

# Structurally Attached Support Systems

The MAPA Structurally Attached Support Series provides a manufactured curb support designed as a cost-effective heavy-duty platform upon which to mount or secure equipment and piping systems in- stalled on single ply or built-up roofs in areas where seismic or high wind zones are of concern and where structural design allows for system loads at attachment points. These structurally attached sup- ports allow for fewer disturbances to the roof membrane by minimizing the overall flashed area of the installation. This design allows the support to be configured as a Master Base, Roller or Strut Support.



MB-146C-SA



MX-5RA9-SA



MX-14SA9-SA

**Note:**

- Where project design allows, free standing supports may be used in conjunction with structurally attached supports.
- Where recommended by design under deck structural support and/or reinforcement of roof insulation should be considered.
- Maximum support spacing should not exceed 10’ O.C.
- Additional supports are recommended at each change of direction, branch and at each initiation and termination of the piping run.
- Supports should be cross-braced at intervals as stated by design engineer in project specifications. Where not specified by design engineer, MAPA Products recommends that supports should be cross-braced at each end of run where the distance from roof surface to bottom of pipe exceeds 12”, then at 80’ intervals or where sway is detected after installation is complete.
- It is the responsibility of the installer to coordinate with the specifying engineer the necessity and/or

**Technical Information:**

Structurally attached supports are manufactured from grade 304 stainless steel with continuously welded seams providing no exposed penetrations in which to maintain the integrity of the roof membrane.
All models are provided with under deck attachment hardware.

- Master Base models are designed with the standard welded support flange which accepts an 1-5/8" square strut but is available for telescoping strut and 2-1/2" IPS Tubing . Support base and framing configuration may be factory modified to meet design criteria for sloped roof surfaces.
- Roller support models use stainless steel hardware and a durable SBR Hard Cast Rubber Roller over a nylon bushing assembly with stainless steel shaft.
- Strut Support Models utilize a heavy duty aluminum 1-5/8 square strut or an optional Galvanized strut.
- *Where structural blocking is utilized; load is transferred directly to the structure; thereby in- creasing the allowable load, as approved by the structural engineer, any increased loading should not exceed 500 lbs.*

## Notes:

# Plumbing Solutions

**Plumbing Solutions..... 29-36**

Plumbing Pedestals Overview ..... 30-32
MPH-24D:24/9 and MPH-24FP-24/9 Rooftop Hydrants ..... 33-34
MPG-Rooftop Gas Pedestal ..... 35
Expansion Tank Cages..... 36

# Versatile / Practical / Affordable

# Plumbing Pedestals Overview

**MAPA Products primary focus is on solutions to "Common Problems" within the construction industry.**

Our Roof Top Pedestals are an excellent example of one of these "Solutions." Prior to the MAPA rooftop Pedestal Hydrant; design options for hydrant installations on the roof relied upon field constructed insulated, sheet metal enclosures covering a roof penetration for a standard hose bib or installation of a "Yard Hydrant" through a pitch pan.

**MAPA Products Design:**

- Utilizes a sturdy shroud with a 16"x16" upper deck flashing or an optional "Deck Cap." Available in both Stainless Steel and Powder Coat.
- Installed through the roof penetration and secured with an under- deck flange to prevent movement within the penetration.
- A weather tight cast dome handle for valve actuation.
- Freeze proof assembly allowing for complete drain down of stand pipe above roofline.

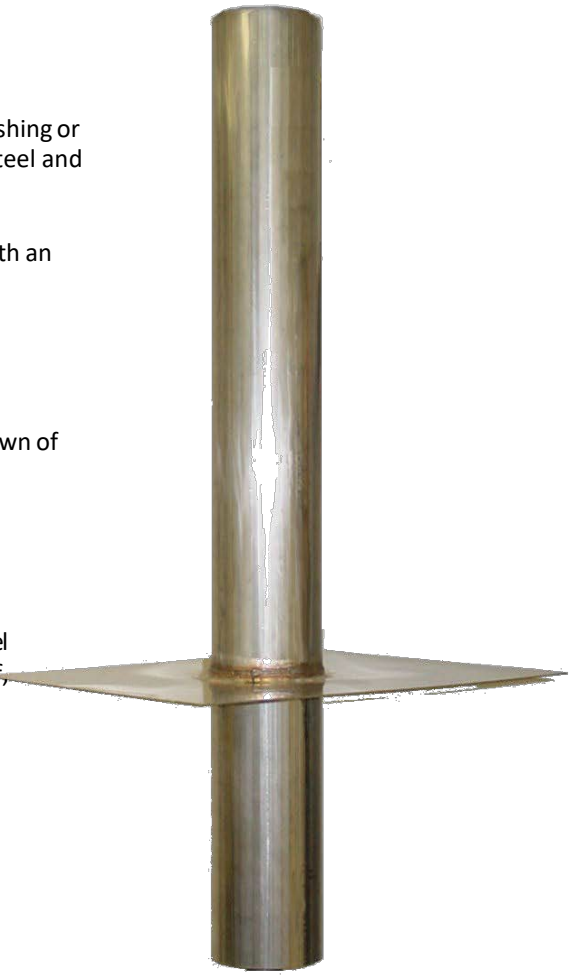

**Optional Valve Assemblies:**

The hydrant is offered as an "FP" series featuring a stainless-steel reservoir to contain water drained from the stand pipe when off, thereby necessitating only a supply pipe to be plumbed and as a "D" series which allows the designer to evacuate the hydrant to an "open drain."



"D" Series



"FP" Series

**Optional Flashings:**

16"x16" upper deck flashing or an optional 12"x12"- "Deck Cap."





# Plumbing Pedestals Overview

**Typical Installation of a MAPA Products Roof Top Pedestal**

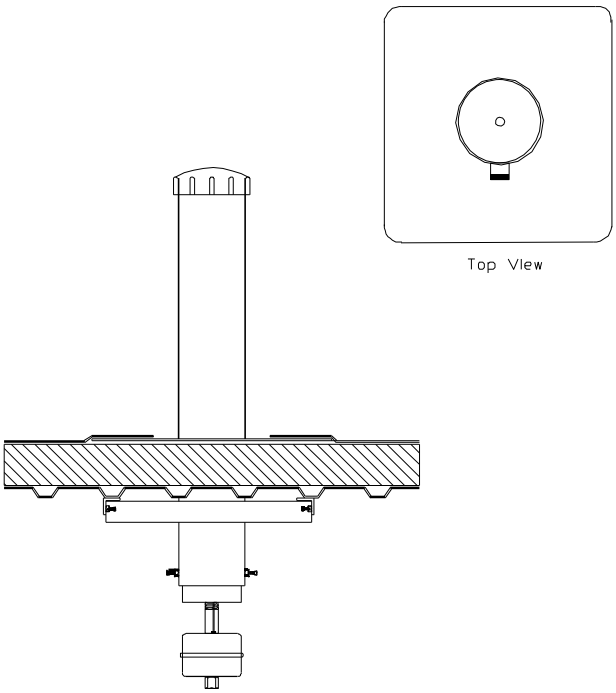


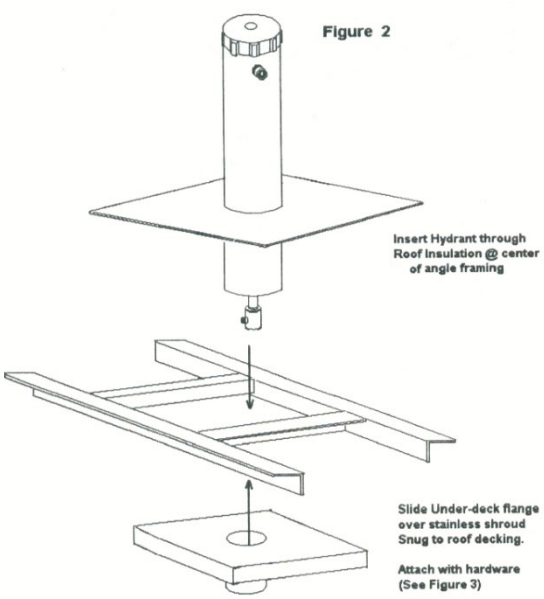


Penetration is made in the roof decking, centered on an angle frame welded to the roof structure, place the pedestal base squarely onto the roof surface or curb, plumb and square the pedestal with the outlet nozzle in the desired direction. Install hardware, secure the Under-Deck Clamp to the pedestal shroud and the angle frame to prevent the pedestal from becoming dislodged from the roof membrane during operation. Finalize the installation by making the appropriate plumbing connections.

*(Refer to product installation guide provided with pedestal for complete details.)*



# Plumbing Pedestals

## MPH-24 Series Roof Top Pedestal Hydrants

**Practical Application and Common Features of the MPH-24-FP:24/9 and MPH-24-D:24/9 Hydrants**

Where there is concern for potential damage to the hydrant assembly due to severe cold weather, the MPH-24 Series Pedestal Hydrant provides a 24" tall freeze proof hose station at required rooftop locations. The weather-Guard Domed handle enables the user to operate the valve assembly while preventing moisture from entering the assembly when the valve is in the OFF position.

The Shroud and Base allow the contractor to make a positive, weather tight flashing to the Hydrant. Units are provided with an under-deck support flange and mounting hardware. This flange when secured to structural angle supports at the roof deck will prevent disruption of the roof flashing during normal operation.

**Optional Features:**

- An upper deck cap may be specified for use in curb mounted applications. Fit for standard 12"x12"x10" curb (Field provided) Standard below flange dimension increases to 24". Suffix: "D"
- *Suffix:xx/yy* Extended shroud for above or below roofline - 6" increments. Suffix: xx/yy Maximum shroud length 6'

The hydrants are also available for use in landscapes where the upper and lower flanges are omitted and replaced with an anchoring collar allowing the hydrant to be securely located in the ground.



| | MPH-24D:24/9 | MPH-24FP:24/9 |
|---|---|---|
| | ¾" inlet / Max 125 psi | ¾" inlet / Max 125 psi |
| | Male Hose Fitting / Built-In Vacuum Breaker | Male Hose Fitting / Built-In Vacuum Breaker |
| **Drain Features** | Automatic Drain Port | Stainless steel operating rod and reservoir |
| **Handle** | Black painted cast aluminum Weather-Guard Dome Handle | |
| **Shroud** | Grade 304 stainless steel shroud or Powder Coated w/ welded stainless steel flange | |
| **Insulation** | R-8 rated / Thermo-Cell insulation | |
| **Mounting Hardware** | Black painted under-deck support flange w/ hardware | |
| ***Suffix:xx/yy*** | Extended shroud for above or below roofline – 6" increments, Max shroud length 72" | |

# Plumbing Pedestals



### How the MAPA Sanitary "FP" series works:

The hydrant design is based on the Venturi principle. Located inside the reservoir, a venturi evacuates the water from the reservoir when the hydrant is turned on. A brass float valve assembly, located on the shroud, allows air to enter the reservoir and displace the evacuating water.

When the hydrant is off, the stopper seals against the nozzle, stopping the flow. The water remaining in the riser drains down into the reservoir tank in the conditioned space below the roofline.

When the hydrant is on, the flow through the nozzle creates a vacuum in the reservoir, evacuating the water out through the hydrant.

### How the MAPA Automatic Draining "D" series works:

The auto-drain assembly has a one-piece rubber plunger combined with an auto-drain port located below freeze line at the base of the hydrant. When the hydrant is off, the "drain-down design" allows the water remaining in the stand pipe to discharge through the field-provided drain-down piping to an open site drain located below the roofline.



# Plumbing Pedestals

**Roof Top Gas Pedestal**

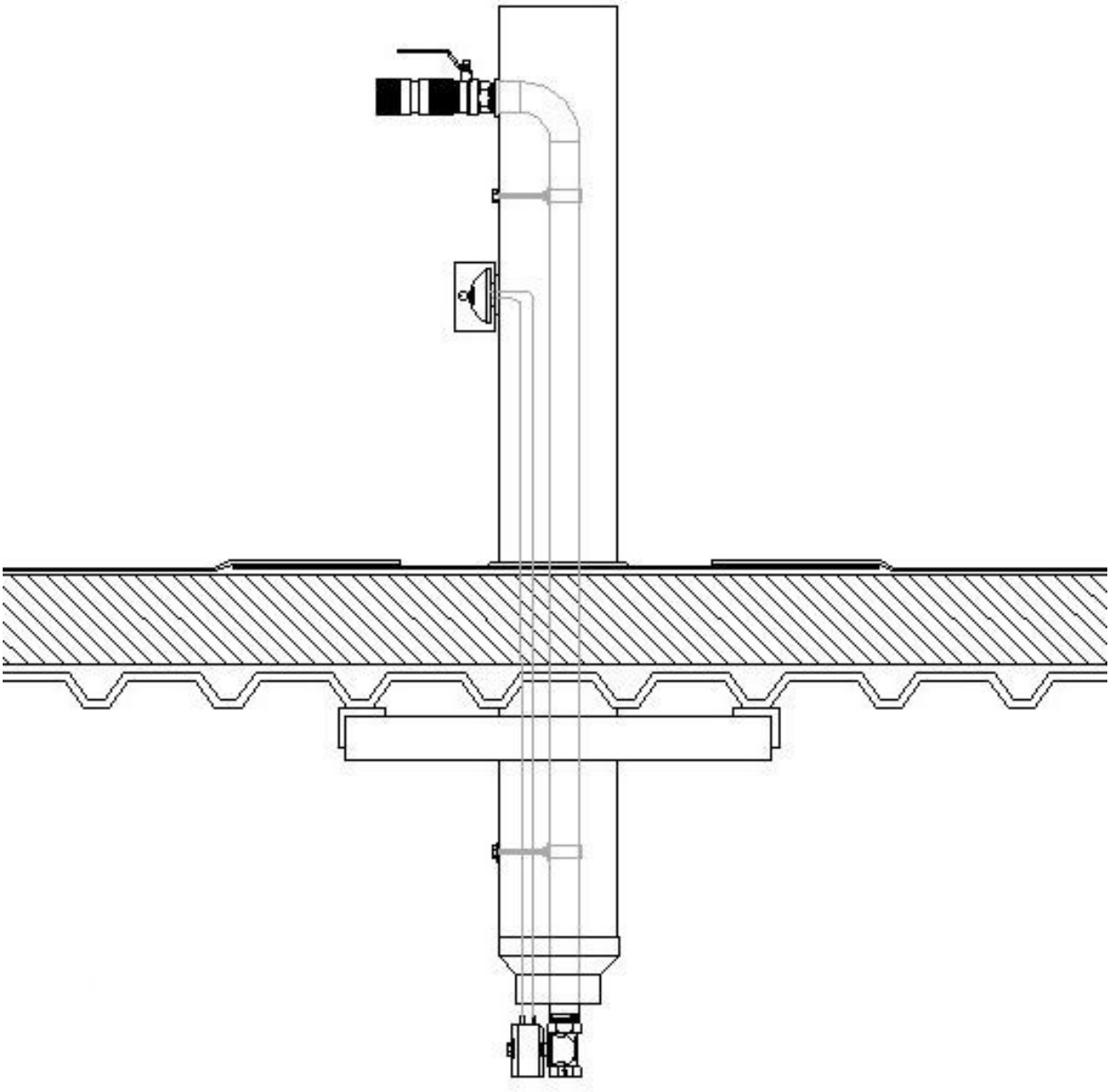

(Rooftop Gas Valve shown with optional quick disconnect and safety feature Weather Resistant Keyed Panic Button Assembly Controlling Series MS-300-120V Gas Solenoid.)

Additional options may include self-contained power supply with latching or low voltage solenoids. MPG-

3/4-QD-IPO-K-C:30/12
(Available for 3/4", 1" or 1-1/2" supply)

**Expansion Cage:** Patent No. 6,520,123

# Expansion Tank Cages

## MXC- (8, 11)

**Practical Application:**
Because standard hot water expansion tanks are factory fitted without support flanges, it becomes necessary to field devise a means to support these tanks. Though often installed merely suspended from the piping system, it is often preferred that these tanks be firmly secured in place upon final installation. Our Expansion-Cages are ideally suited for this purpose. The light duty wire construction provides a cost efficient means of providing this support. The Expansion-Cage is available for all common sized in-line expansion tanks.

**Recommended Usage:**
Use the Expansion-Cage to support standard Diaphragm type In-Line Hot Water Expansion Tanks. These cages will support tanks in vertical position with NPT connection resting inside the bottom ring of the cage. The Expansion-Cage is ideally suited for residential usage as well as commercial installations where water heater sizes permit the use of a diaphragm type in-line expansion tank.

**Technical Information**

| | ***MXC-8*** | ***MXC-11*** |
|---|---|---|
| **Application:** | 2.0 gallon Expansion Tanks | 4.0 gallon Expansion Tanks |
| **Composition:** | 1/4" steel rod<br>Black painted | |
| **Included Hardware:** | Mounting screws, washers and inserts | |



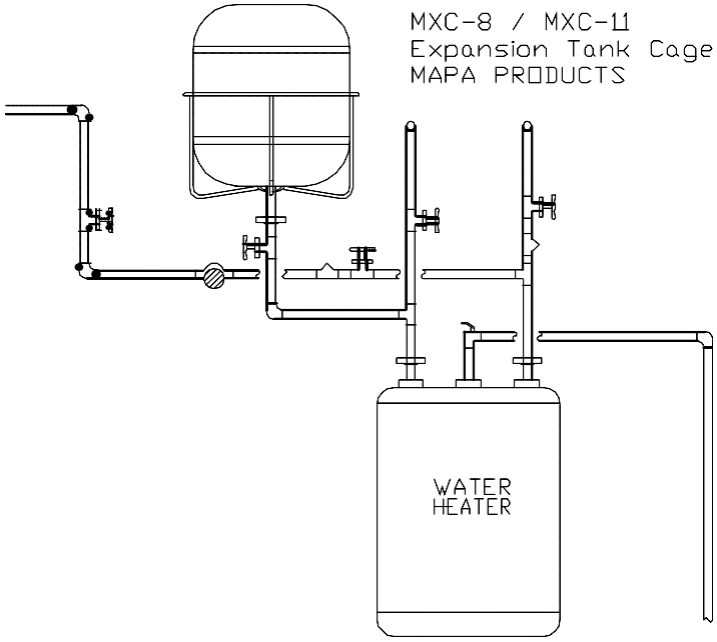

## Notes:

# Electrical Solutions

**Electrical Solutions…….. 37-45**

Electrical Pedestals Overview.....38-39

MPD Series / Pedestal Disconnects ……. 40-41

MPSD Series / Pedestal Disconnects .....42-43

MPX Series / Utility Pedestals .....44

# Versatile / Practical / Affordable

# Electrical Pedestals Overview

**MAPA Products primary focus is on solutions to "Common Problems" within the construction industry.**

Our Roof Top Pedestals are an excellent example of one of these "Solutions." The MAPA rooftop Pedestal Disconnect was introduced as an alternative to multiple penetrations for electrical connections to roof top equipment. The water tight shroud allows for installation with our standard deck flashing or an optional Deck Cap rather through a typical pitch pocket.

**MAPA Products Design:**

- Utilizes a sturdy stainless-steel shroud with a 16"x16" stainless steel upper deck flashing or an optional "Deck Cap."
- Installed through the roof penetration and secured with an under-deck flange to prevent movement within the penetration.
- Rain proof pedestal penetrations for all attached features.



**Optional Pedestal Assemblies:**

- Disconnects
- Starter/Disconnects
- Utility lighting and electrical outlet.

**Optional Flashings:**

16"x16" stainless steel upper deck flashing or an optional 12"x12"-"Deck Cap."





# Electrical Pedestals Overview

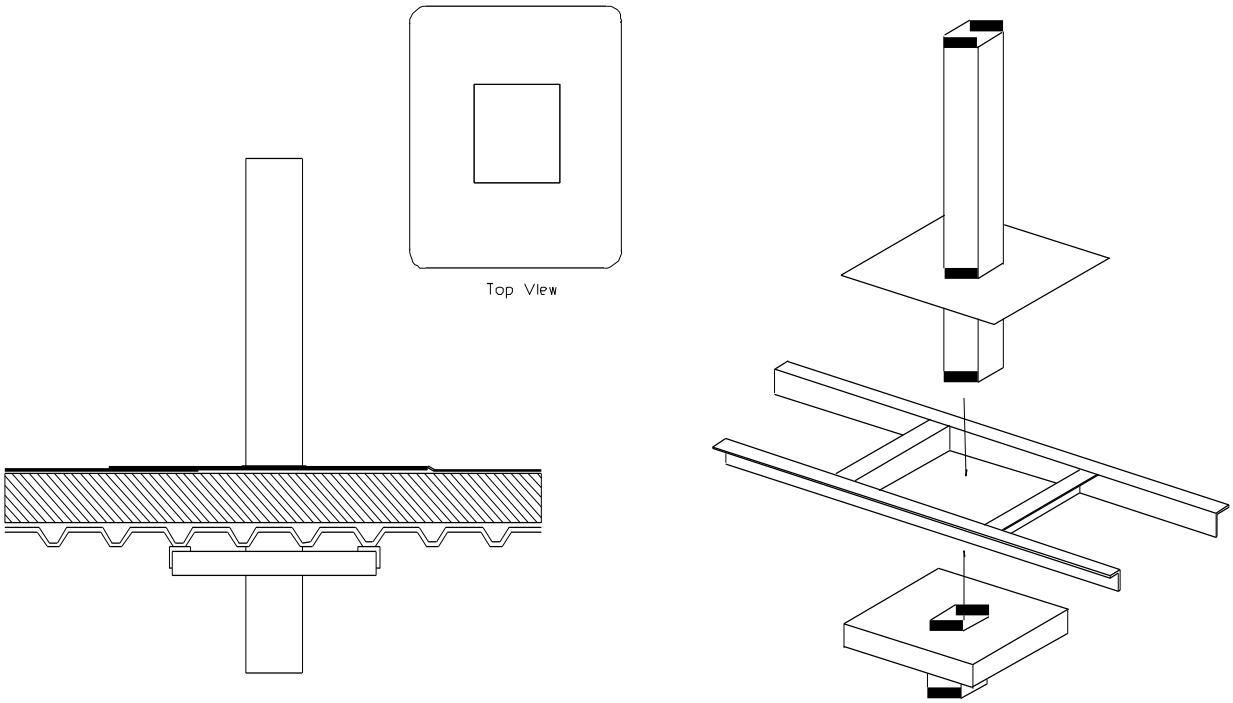


Penetration is made in the roof decking, centered on an angle frame welded to the roof structure, place the pedestal base squarely onto the roof surface or curb, plumb and square the pedestal with the service in the desired direction. Install hardware, secure the Under-Deck Clamp to the pedestal shroud and the angle frame to prevent the pedestal from becoming dislodged from the roof membrane during operation. Finalize the installation by making the appropriate connections.

*(Refer to product installation guide provided with pedestal for complete details.)*



# Electrical Pedestals

## MPD Series / Pedestal Disconnects

The MAPA Products Fusible Rainproof Pedestal Mounted Safety Switch provides local disconnect of the electrical service at roof mounted equipment. Disconnects are available in General Duty or Heavy Duty Series. The stainless shroud with integrally welded deck flange enables a positive weather-tight flash of the unit to the roof membrane without the need for additional flashing or pitch-pan. The need to interrupt electrical service remotely in the case of equipment change-out can be avoided since service disconnect is mounted adjacent to rather than onto the equipment.

**Features:**
The Standard Stainless Steel Shroud extends below the upper flange an additional twelve inches to permit the unit to be securely fastened to the roof structural members by securing the under-deck mounting flange to a welded deck flange. The roof flange is provided with fastening hardware to enable the installer to secure the flange first against the shroud and then onto a deck flange.

Pedestals are furnished completely assembled with Safety Switch and wiring leads. Leads for connection to the power source below the roofline are shielded in Flexible Metal Conduit. Wiring service for the optional GFCI is provided in a separate flexible conduit. Wiring and Conduit sizes are according to industry standards and NEC. All connections exposed to weather are made liquid tight. Optional termination cables are available in five (5) or ten (10) foot lengths. We recommend using support devices such as MAPA Strut Supports when a distance between the Pedestal and the service equipment exceeds three feet.



**Pedestal Disconnect MPD-30: 36/12**

An available control port when mounted on the surface of the shroud enables control wiring to be installed exterior of the roof-top equipment. Service conduit with a pull-string extends from the port to beneath the roof structure for easy accessibility. A drillable plug permits the installer to size the penetration to that of the control cable. The control cable should be fastened to the electrical service cable or other rigid member.

All safety switch disconnects are furnished with a NEMA 3R Rainproof enclosure. The switch is provided with handle suitable for padlocking in the OFF position. Defeat-able front accessible door prevents opening of door when in ON position or turning the switch ON when the door is open. (Fuses are field pro- vided)

**Optional Features:**

- An upper deck cap may be specified for use in curb mounted applications. Fit for standard 12”x12”x10” curb (Field provided) Standard below flange dimension increases to 24”. Suffix: “D”
- Extended shroud for above or below roofline - 6" increments. Suffix: xx/yy

**General Product Specifications:**

Provide MAPA Products Stainless Steel Pedestal Disconnects at all roof-mounted equipment. Disconnects shall be provided with voltage ratings suitable for normal voltage of the equipment with which they are to be applied. Mount pedestal within 6 feet of the equipment served and as directed by engineer. Each pedestal shall be furnished complete with termination cable, under-deck flange, GFCI convenience outlet, and control port.

# Electrical Pedestals

**Series and Model Specifics:**
Model MPD-30:36/12 General Duty Utility Pedestal - Unit utilizes Square D or Eaton Safety Switch. 2 wire (2 Blades and Fuse holders, 1 Neutral) 120-240 Vac. Max rating 30 amps. - UL Listed, File E2875 Designed for light to medium duty applications such as roof mounted air conditioning units and exhaust fans.

Heavy Duty Series utilizes the Square D or Eaton 240 Volt or 600 Volt, depending upon the application. Switches are provided without fuses. Other configurations are available, including non-fused for heavy duty series, to meet specific design criteria.

## Disconnect Models:

| Model | Description | Vac. | Max rating |
|---|---|---|---|
| MPX4:36/12 | Utility Pedestal 4" Less Disconnect | | |
| MPD-30:36/12 | 2 Blades / 2 Fuse holders / 2 wire | 240 Vac | 30 amp |
| MPD-30-2X:42/12 | 2 Blades / 2 Fuse holders / 2 wire | 240 Vac | 30 amp |
| MPD-60-2X:48/12 | 2 Blades / 2 Fuse holders / 2 wire | 240 Vac | 60 amp |
| MPD-100-2X:48/12 | 2 Blades / 2 Fuse holders / 2 wire | 240 Vac | 100 amp |
| MPD-30-3Z:42/12 | 3 Blades / 3 Fuse holders / 3 wire | 600 Vac | 30 amp |
| MPD-60-3Z:48/12 | 3 Blades / 3 Fuse holders / 3 wire | 600 Vac | 60 amp |
| MPD-100-3Z:48/12 | 3 Blades / 3 Fuse holders / 3 wire | 600 Vac | 100 amp |

| **Standard Wire Configuration** | |
|---|---|
| 2X= | 240 VAC W/O Neutral |
| 3Z= | 600 VAC W/O Neutral |
| | 3X and 4X includes Neutral Bar |

*Note: Heavy Duty Safety Switches are provided without fuses. Other configurations are available to meet specific design criteria. Pedestals are custom fabricated for specific project requirements; these units may require a (10) day lead time for quotation and typically require a four (4) week lead time after product submittal approval*

## Pedestal Disconnect Optional Features:

| Option: | |
|---|---|
| *D | An upper deck cap may be specified; Fit for standard 12"x12"x10" curb (Field provided) Standard below flange dimension increases to 24". |
| 5C | 5' Termination Cable/Liquid-Tight Steel Core Flexible Conduit. (3Wire W/Ground) |
| 10C | 10' Termination cable / Liquid-Tight Steel Core Flexible Conduit. (3 Wire W/ Ground) |
| NF | Non-Fused Disconnect - Available on all Disconnects |
| SAPD | Structurally Attached Mounting Kit for Electrical Pedestals |
| MX-1.500-SA | Accessory Structural Support Bracing where height is ≥ 48" above roof. |
| PN: 1183 | SPSA 45° Fixed Bracket W/Hardware |
| *Suffix:xx/yy | Extended shroud above or below roofline. (Specify in model number-6"increment) |
| 2X to 3X<br>3Z to 4Z | Add Neutral Assembly – Available on all Disconnects |
| Optional Features Available: | |
| G | GFCI – Commercial grade receptacle housed in die-cast aluminum single gang weatherproof outlet box with weatherproof hinged cover plate. |
| A | Lightning Surge Arrestor- Arrestor is mounted to side of Safety Switch / 240 Single Phase |
| A3P | Lightning Surge Arrestor- Arrestor is mounted to side of Safety Switch /3 Phase |
| P | Control Port |
| BRC | Additional Flex Conduit for Line Below Roof |
| * Options available for the MPX4:36/12 | |

**Note:** Pedestals are custom fabricated for specific project requirements; these units may require a (10) day lead time for quotation and typically require a four (4) week lead time after product submittal approval.

# Electrical Pedestals

## MPD Series / Pedestal Disconnects

The MAPA Products Fusible Rainproof Pedestal Mounted Safety Switch provides local starter- disconnect of the electrical service at roof mounted equipment. The Stainless Shroud with integrally welded deck flange enables a positive weather-tight flash of the unit to the roof membrane without the need for additional flashing or pitch-pan.

The need to interrupt electrical service remotely in the case or equipment change-out can be avoided since the service disconnect is mounted adjacent to rather than onto the equipment. Disconnects are available in Grey Powder Coat or Stainless Steel. Optional features may include a GFCI duplex plug with a weatherproof cover as well as a termination cable.

The Standard Stainless Steel Shroud extends above roof line 52, 66 or 74 inches (depending on Disconnect model) with an additional twelve inches beneath the roofline to permit the unit to be securely fastened to the roof structural members by securing the under-deck mounting flange to a welded deck flange. The roof flange is provided with fastening hardware to enable the installer to secure the flange first against the shroud and then onto a deck flange.

Models R-S are provided with a Panel Operating Switch. Pedestals are furnished completely assembled with Safety Switch and wiring leads below the roofline. Where provided, electrical service wire cable leads for termination at the equipment are protected by Liquid-Tight Steel Core Flexible Conduit. Leads for connection to the power source below the roofline are shielded in Flexible Metal Conduit.



**Pedestal Starter-Disconnect MPSD-30-R-S: 52/12**

Wiring service for the optional GFCI is provided in a separate flexible conduit. Wiring and Conduit sizes are according to industry standards and NEC. All connections exposed to weather are made liquid tight.

Optional termination cables are available in 5’ and 10’ lengths. We recommend using support devices such as MAPA Strut Supports when a distance between the Pedestal and the service equipment exceeds three feet.

Safety switch starter/disconnects are furnished with NEMA 12/3 Rainproof, gray powder coated enclosure. The switch is provided with handle suitable for padlocking in the OFF position. Defeat-able front accessible door pre- vents opening of switch when in ON position or turning the switch ON when the door is open.

**Typical Product Specifications:**

Provide MAPA Products Stainless Steel Pedestal Starter-Disconnect where shown at roof-mounted equipment. Disconnects shall be pro- vided with voltage ratings suitable for normal voltage of the equipment with which they are to be applied. Mount pedestal within 4 feet of the equipment served and as directed by engineer. Each pedestal shall be furnished complete with termination cable, under-deck flange, GFCI convenience outlet.

***Note**: Pedestals are custom fabricated for specific project requirements; these units may require a (10) day lead time for quotation and typically require a four (4) week lead time after product submittal approval. Other configurations are available to meet specific design criteria.*

# Electrical Pedestals

## Series and Model Specifics:

Designed for 3 phase Delta 120/480 applications such as roof mounted air conditioning units and exhaust fans. The fuses and heaters required to meet the demands of the unit are to be field provided. Other configurations are available to meet specific design criteria. Pedestals are custom fabricated for specific project requirements with a (10) day lead time for quotation and typically require a four (4) week lead time after product submittal approval.

**Single Speed Gray Enamel Enclosures**
**Model MPSD- (*XX*) / Standard NEMA 12/3 Rain Tight -Starter-Disconnects**
**(*Replace XX with max amp rating.)***

| Model | Disconnect-Starter Description | Max Amp Rating |
|---|---|---|
| MPSD-30-R:52/12 | Single Speed 240V-30 amp-Fused –W/O Panel Switch SQD 8538SCA12V03 | 30 amp |
| MPSD-30-R-NF:52/12 | Single Speed 240V-30 amp-Non-Fused –W/O Panel Switch SQD 8538SCA11V03 | 30 amp |
| MPSD-60-R:52/12 | Single Speed 240V-60 amp-Fused –W/O Panel Switch SQD 8538SDA12V03 | 60 amp |
| MPSD-60-R-NF:52/12 | Single Speed 240V-60 amp-Non-Fused –W/O Panel Switch SQD 8538SDA11V03 | 60 amp |
| MPSD-30-R-S:52/12 | Single Speed 240V-30 amp-Fused –W/Panel Switch SQD 8538SCA22V03 | 30 amp |
| MPSD-30-R-S-NF:52/12 | Single Speed 240V-30 amp-Non-Fused –W/Panel Switch SQD 8538SCA21V03 | 30 amp |
| MPSD-60-R-S:52/12 | Single Speed 240V-60 amp-Fused –W/Panel Switch SQD 8538SDA22V03 | 60 amp |
| MPSD-60-R-S-NF:52/12 | Single Speed 240V-60 amp-Non-Fused –W/Panel Switch SQD 8538SDA21V03 | 60 amp |

**Two Speed Gray Enamel Enclosures**
**Model MPSD2- (*XX*) / Standard NEMA 12/3 Rain Tight -Starter-Disconnects**
(*Replace XX with max amp rating.)*

| Model | Disconnect-Starter Description | Max Amp Rating |
|---|---|---|
| MPSD2-30-R-S:52/12 | Dual Speed 240V-30 amp-Fused –W/O Panel Switch SQD 8810DCA2V03 | 30 amp |
| MPSD2-60-R-S:66/12 | Dual Speed 240V-60 amp-Fused –W/O Panel Switch SQD 8810DDA2V03 | 60 amp |

**Optional Features Available:**

| | |
|---|---|
| G | GFCI-Commercial grade receptacle housed in die-cast aluminum single gang weatherproof outlet box with weatherproof hinged cover plate. |
| ABS | Lightning Surge Arrestor-Arrestor is mounted to side of Safety Switch |

**Additional Options:**

| | |
|---|---|
| *Suffix:xx/yy | Extended shroud above or below roofline. (Specify in model number-6"increment) D |
| | Upper Deck Cap |
| 5C | 5’ Termination Cable (3 Wire W/ Ground) |
| 10C | 10’ Termination Cable (3 Wire W/ Ground) |
| 5C | 5’ Termination Cable (6 Wire W/ Ground) |
| 10C | 10’ Termination Cable (6 Wire W/ Ground) |
| *MX-1.500-SA* | Accessory Structural Support Bracing where height is ≥ 48” above roof. |
| *1183* | SPSA 45 ° Fixed Bracket with Hardware |
| SAPD | Structurally Attached Mounting Kit for Electrical Pedestals |
| BRC | Additional Flex Conduit for Line Below Roof |
| Note: | Six Wire cables are used with Two Speed Starters. |

# Electrical Pedestals

## MPX-20-(X):36/12 / Utility Pedestal



The MAPA Products Rainproof Utility Pedestal provides a means to mount a variety of services for local applications. The Stainless Shroud with integrally welded deck flange enables a positive weather-tight flash of the unit to the roof membrane without the need for additional flashing or pitch-pan.

**Features:**
The Standard Stainless Steel Shroud extends above roof line thirty-six inches with an additional twelve inches beneath roofline so as to permit the unit to be securely fastened to the roof structural members by securing the under-deck mounting flange to a welded deck flange. The roof flange is provided with fastening hardware to enable the installer to secure the flange first against the shroud and then onto a deck flange.

Pedestals are furnished completely assembled. Leads for connection to the power source below the roofline are shielded in Flexible Metal Conduit Wiring and Conduit sizes are according to industry standards and NEC. All fixtures are within NEMA 3R rainproof enclosures. Connections exposed to weather are made liquid tight.



**Component Specifics:**
Pedestal – 2" X 2" 304 Stainless Square Tubing, Total length = 48” w/ 36" above roof flange.
Solid welded stainless cap tops off the Shroud.
Roof Flange – 304 Stainless – continuous welded seam at Pedestal. Under deck Flange – Welded sheet metal – black powder coated w/ anchor bolts and trim to secure pedestal to roof structure.

| ~~Utility Pedestal~~ | |
|---|---|
| MPX-2:36/12 | Utility Pedestal 2”x2” |
| MPX-20-G:36/12 | 36” Utility pedestal w/ GFCI |
| MPX-20-GL:36/12 | 36” Utility pedestal w/ GFCI and Incandescent light array |
| MPX-20-GL-S:36/12 | 36” Utility pedestal w/ GFCI, Incandescent light array and Switch |
| MPX-20-L:36/12 | 36” Utility pedestal w/ Incandescent light array |
| MPX-20-L-S:36/12 | 36” Utility pedestal w/ Incandescent light array and Switch |
| **Options:** | |
| *D* | Upper Deck Cap |
| *Suffix:xx/yy* | Extended shroud for above or below roofline - 6" increments |

* Custom configurations are available to meet specific design criteria. Contact the manufacturer.

Note: Pedestals are custom fabricated for specific project requirements and typically require a four (4) week lead-time after product submittal approval.

## Notes:

# Accessories

**Accessories ..... 46-51**

Walk and Traffic Pads ..... 47

Assemblies (Clamp, Roller and Pipe Straps) ..... 48

Pipe Clamps (Stainless Steel and Nylon Snap N Strut) ..... 49

Snap N Strut Selection Chart ..... 50

MPSA(x) Structural Attachment Accessory ..... 51

# Versatile / Practical / Affordable

# Accessories: Walk Pads

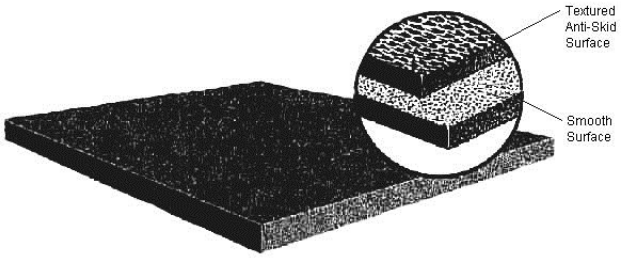


Material: 9.2mm Thick 100% Recycled Black Rubber
Surface: Flat smooth
Back Side: Wire mesh texture, anti-skid surface.
Weight 3 lbs / square foot
Sizes: Varies by duty.

MAPA Products Standard Duty supports are manufactured with a support pad of .125 ml black Neoprene.

As an alternative, MAPA Products Heavy-Duty Walk Pads provided further protection for roof membrane while increasing overall footprint of the support and its load limit. Walk pads are manufactured from 100% Recycled Black Rubber.

### Recommended Usage:

Use as a heavy-duty pad for all supports when an increased footprint is desired on the roof surface. Additionally the weight limit of the support may be increased by 20%. Where applicable E-6000 adhesive, as manufactured by Eclectic Products, may be used to bond the pad to the support.

MAPA Products provides a standard 24" x 24" tile which in many cases conforms to commercial building codes requiring walkways be installed on roofs to prevent damage to the roof.

| Model | Standard Support Application | Description |
|---|---|---|
| MWP812 | For use w/ all supports utilizing: MT Series Strut & Roller Supports | 8" x 12" pad |
| MWP914 | For use w/ all supports utilizing: MS-10 Series Strut Supports & MS-2.5, 3& 4 Series Roller Supports | 9" x 14" pad |
| MWP1010 | For use w/ all supports utilizing: MT-1 base, MA-6SF4 | 10" x 10" pad |
| MWP1016 | For use w/ all supports utilizing Aluminum, Standard or Heavy-Duty: MS-12 Series Strut Supports & 5RA Series Roller Supports | 10" x 16" pad |
| MWP1020 | For use w/ all supports utilizing Standard or Heavy-Duty:MX-6RA6, MX6RA14 | 10" x 20" pad |
| MWP1212 | For use w/ all supports utilizing: MS-1 base | 12" x 12" pad |
| MWP1220 | For use w/ all supports utilizing heavy-duty: MB815 | 12" x 20" pad |
| MWP1222 | For use w/ all supports utilizing: MX-18SA6 & 18SA18 | 12" x 22" pad |
| MWP1224 | For use w/ all supports utilizing: MX-20SA6 & MX-20SA18 | 12" x 24" pad |
| MWP1414 | For use w/ all supports utilizing: MB-1010 base | 14" x 14" pad |
| MWP1820 | For use w/ all supports utilizing: MB-1416 base | 18" x 20" pad |
| MWP2020 | For use w/ all supports utilizing: MB-1616 base | 20" x 20" pad |
| MWP2424 | For use w/ all supports utilizing: MB-2020 base | 24" x 24" pad |
| MWP1030 | For use w/ all supports utilizing: MCB-624 | 10" x 30" pad |

**E-6000 Adhesive:** MAPA Products offers this Multi-Purpose / Non-Sag Formula / Abrasion resistant – Flexible – Paintable & Waterproof adhesive as a tough, flexible and highly versatile rubber-based com- pound that exhibit exceptional adhesive and sealant qualities for use with our MWP Series walk pads.

# Accessories: Assemblies

**MAPA Products Adjustable Assemblies are typically used as an accessory to the MAPA Stainless Bridging Systems and Strut Supports.**

## MS-AA5 or MS-AA9 Accessory Single Post Assemblies

These Adjustable Assemblies are produced from 3/8" stainless steel all thread and are available in 5"(MS-AA5) and 9"(MS-AA9) rod lengths.

Pipe Clamps are available in various common sizes.

**Available for O.D. Pipe Size**
**5/8" / 7/8" / 1 1/8"**

Each clamp has a UV protected rubber cushion, which provides for separation of dissimilar metals and vibration isolation. Removing the rubber cushion will in- crease pipe diameter by one size.

The Strut Nuts are used to attach the assembly to the support.



**MS-AA**

## Fixed Height & Adjustable Roller Assemblies

Manufactured with stainless steel all thread rod, a stainless steel axle, and a UV protected rubber roller the MAPA roller assemblies provide an excellent accessory to the MAPA Bridging Systems and Strut Supports when installing natural gas piping along a common corridor with other piping.



**MS-10FH**

| | |
|---|---|
| MS-3A5 | Roller Assembly accommodates 3" IPS and smaller piping |
| MS-5A5 or FH | Roller Assembly accommodates 5" IPS and smaller piping |
| MS-8A5 or FH | Roller Assembly accommodates 8" IPS and smaller piping |
| MS-10A5 or FH | Roller Assembly accommodates 10" IPS and smaller piping |

## Pipe Strap

**Heavy-Duty Stainless Steel Pipe Straps, 2-Hole**
Pre-formed pipe straps are used to secure tubing to roller supports with a loose fit allowance for expansion and contraction of the pipe. 304 stainless steel provides cor- rosion resistance piping to support. The Pipe Straps are set over the pipe then secured with provided hardware.



| Model | Dimensions | Description |
|---|---|---|
| **MPS-7** | 1/2" x 7" | For use with MT-1V |
| **MPS-11** | 3/4" x 11" | For use with MT-2RA6, MT-2RF4, MS-2.5RA7 |
| **MPS-14** | 1" x 14" | For use with MS-3 & MS-4 all series. |
| **MPS-17** | 1 1/4" x 17" | For use with MS-5 all series. |
| **MPS-20** | 1 1/4" x 20" | For use with MX-6 all series. |
| **MPS-26** | 1 1/4" x 26" | For use with MX-8 all series. |
| **MPS-32** | 1 1/4" x 32" | For use with MX-10 all series. |

# Accessories : Pipe Clamps

## Snap-N-Strut Clamps



Additional information on available models, sizing and load limits can be found on the **Snap-N-Strut Selection Chart** on the following page.

The design of the Snap-N-Strut Clamps makes them the perfect accessory to MAPA Products Nylon and Stainless Strut Supports and Bridging Systems.

Snap-N-Strut Clamps and Strut Nuts are produced from a high performance UV stabilized 6/6 nylon resins possessing exceptional long-term stress resistance and chemical stability over a wide range of temperatures.

**SNS- (_____)**

The hinged, snap-on lock arm adjusts for pipe O.D. variations, affording each hanger the ability to accommodate several different pipe sizes.

The upper and lower engagement plates are designed to grip the strut and restrain lateral movement along its length. When the pipe is inserted into the hanger, the hanger can no longer turn. Thus, even the need for a lock nut is eliminated.



**Strut Nuts Threaded for 3/8" rod**

With a totally non- metallic design, there is no need to isolate copper tubing. Eliminating the concern for galvanic corrosion.

The nature of the nylon material utilized, combined with the uniquely engineered design, absorbs vibration and acts as a cushion between the piping and its supporting structure.

## Stainless Pipe Clamps

These stainless steel pipe clamps are ideally suited for applications where moisture is prevalent and corrosion is of concern.

A removable rubber cushion provides for separation of dissimilar metals and vibration dampening. Removing the rubber cushion will increase accepted pipe diameter by one size.

All clamps have 3/8" threaded collar welded to the base.

Utilizing these clamps in commercial kitchens provides a practical way to secure exposed domestic water piping and drain lines below and behind stainless steel kitchen equipment.

**MSC-( )**



**Stainless steel pipe clamp with rubber cushion**

These clamps may also be utilized in mechanical and boiler rooms to support smaller domestic water piping and conduit. The stainless pipe clamp, a length of stainless steel all thread rod, a Strut Nut and a section of aluminum strut combine to provide a corrosive resistant mounting system to support piping away from the wall surface.

**Available for O.D. Pipe Size**
**5/8" / 7/8" / 1 1/8"**

# Accessories: Snap-N-Strut Clamp Size Selection Chart

## Snap-N-Strut Clamp Size Selection Chart

| Hanger No. | Steel-Plastic Sch.40 & 80 | Copper Types K,L, M & DWV | Refrigeration Copper | Electric EMT | Electric Heavy Wall | Electric IMC | Stainless Steel Tube | Metric Size Range mm. | Max. Load |
|---|---|---|---|---|---|---|---|---|---|
| 12-16 | 1/4" .540 | 3/8" - 1/2" .500 - .625 | 1/2" - 5/8" .500 - .625 | | | | 1/2" .500 | 12 - 16 mm .630 | 170 |
| 17-20 | 3/8" .675 | 5/8" .750 | 3/4" .750 | 1/2" .706 | | | 3/4" .750 | 17 - 20 mm .787 | 195 |
| 21-24 | 1/2" .840 | 3/4" .875 | 7/8" .875 | 3/4" .922 | 1/2" .840 | 1/2" .815 | | 21 - 24 mm | 215 |
| 25-29 | 3/4" 1.050 | 1" 1.125 | 1-1/8" 1.125 | | 3/4" 1.050 | 3/4" 1.029 | 1" 1.000 | 25 - 28 mm .984 - 1.100 | 315 |
| 30-34 | 1" 1.315 | | | 1" 1.163 | 1" 1.315 | 1" 1.290 | 1-1/4" 1.250 | 32 mm 1.260 | 320 |
| 35-38 | | 1-1/4" 1.375 | 1-3/8" 1.375 | 1-1/4" 1.510 | | | 1-1/2" 1.500 | | 342 |
| 40-44 | 1-1/4" 1.660 | 1-1/2" 1.625 | 1-5/8" 1.625 | 1-1/2" 1.740 | 1-1/4" 1.660 | 1-1/4" 1.638 | | 40 mm 1.570 | 365 |
| 48-54 | 1-1/2" 1.900 | 2" 2.125 | 2-1/8" 2.125 | | 1-1/2" 1.900 | 1-1/2" 1.883 | 2" 2.000 | 50 mm 1.970 | 380 |
| 56-63 | 2" 2.375 | | | 2" 2.197 | 2" 2.375 | 2" 2.360 | 2-1/2" 2.500 | 63 mm 2.480 | 410 |
| 66-76 | 2-1/2" 2.875 | 2-1/2" 2.625 | 2-5/8" 2.625 | 2-1/2" 2.875 | 2-1/2" 2.875 | 2-1/2" 2.857 | 3" 3.000 | 66 - 76 mm | 500 |
| 79-93 | 3" 3.500 | 3 – 3-1/2" 3.125 - 3.625 | 3 – 3-1/2" 3.125 - 3.625 | 3" 3.500 | 3" 3.500 | 3" 3.500 | 3-1/2" 3.500 | 79 - 93 mm | 600 |
| 101-115 | 3-1/2" - 4" 4.000 - 4.500 | 4" 4.125 | 4" 4.125 | 4" 4.500 | 4" 4.500 | 4" 4.500 | 4" 4.000 | 101-115 mm | 950 |

# Accessories:

### MX-1.500-SA:

Structural Support Bracing for Pedestals where height is ≥ 48" above the roof. Additional structural bracing should be utilized where vertical sway is detected. Attachment points are provided on both sides and rear of the pedestal for these connections utilizing a rigid strut design.

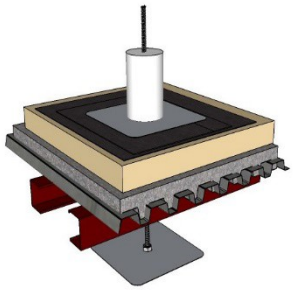

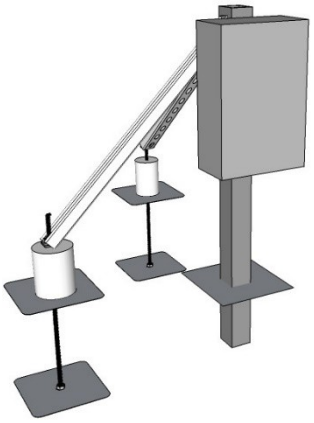

### Installation Sequence:

Once the installation of the Electrical Pedestals is complete, install the Structurally Attached Single Post Support Bases.

- Make penetrations where applicable through roof membrane, insulation and deck to structural member(s) to which supports are to be attached. Use the provided support base template on roof sur- face at the designated support location.
- As designated by the project engineer's specifications and/or roofing manufacturer recommendation; remove roof membrane from support perimeter and/or remove insulation to expose roof deck. Replace insulation with structural blocking as specified by the design engineer. The use of structural blocking transfers load directly to the structure allowing for increased loads not exceeding 500lbs. as approved by the structural engineer.
- From underside of the roof structure, secure support to structural members with provided Under Deck Plate or other structural support bracing as designated by the project engineer's specifications.
- Attach ***Field Provided*** standard 1 5/8 slotted strut to the pedestal at attachment points and the Single Post Support bases using the angle brackets and hardware included with this assembly.

# Technical Data

**Technical Data .....52-57**
Model Number Reference Chart .....53

# Versatile / Practical / Affordable

# Technical Data:

**Model Number Reference Chart:**

| Single Post Supports | | Strut Supports | | Roller Supports | |
|---|---|---|---|---|---|
| **2008 and prior** | **2009** | **2009** | **2024** | **2009** | **2024** |
| MT-1V | MT-1V | MT-8SF4 | MT-8SF4 | MT-2RF4 | MT-2RF4 |
| MT-1-1216 | MT-1-1216-A8 | MT-8SF4-P | MT-8SF4-P | MT-2RF4-P | MT-2RF4-P |
| MT-1-2124 | MT-1-2124-A8 | MT-8SA6 | MT-8SA6 | MT-2RA6 | MT-2RA6 |
| MT-1-2529 | MT-1-2529-A8 | MT-8SA6-P | MT-8SA6-P | MT-2RA6-P | MT-2RA6-P |
| MT-1-3034 | MT-1-3034-A8 | MS-10SF4 | Discontinued | MS-2.5RA7 | Discontinued |
| MT-1-3538 | MT-1-3538-A8 | MS-10SF4-P | Discontinued | MS-2.5RA7-P | Discontinued |
| MT-1-4044 | MT-1-4044-A8 | MS-10SA7 | MS-10SA8 | MS-3RA7 | MS-3RA8 |
| MT-1-4854 | MT-1-4854-A8 | MS-10SA7-P | MS-10SA8-P | MS-3RA7-P | MS-3RA8-P |
| MT-1-5663 | MT-1-5663-A8 | MS-10SA10 | MS-10SA10 | MS-3RA12 | MS-3RA12 |
| MS-1-5/8 | MS-1-5/8-A10-P | MS-10SA10-P | MS-10SA10-P | MS-3RA12-P | MS-3RA12-P |
| MS-1-7/8 | MS-1-7/8-A10-P | MS-10SA14 | MS-10SA14 | MS-4RF3 | Discontinued |
| MS-1-1 1/8 | MS-1-1 1/8-A10-P | MS-10SA14-P | MS-10SA14-P | MS-4RF3-P | Discontinued |
| MS-1-1 3/8 | MS-1-1 3/8-A10-P | MS-12SF4 | Discontinued | MS-4RA7 | MS-4RA8 |
| MS-1-1 5/8 | MS-1-1 5/8-A10-P | MS-12SF4-P | Discontinued | MS-4RA7-P | MS-4RA8-P |
| MS-1-2 1/8 | MS-1-2 1/8-A10-P | MS-12SA7 | MS-12SA8 | MS-4RA10 | MS-4RA10 |
| MS-1E-5/8 | MS-1-5/8-A14-P | MS-12SA7-P | MS-12SA8-P | MS-4RA10-P | MS-4RA10-P |
| MS-1E-7/8 | MS-1-7/8-A14-P | MS-12SA10 | MS-12SA10 | MS-4RA14 | MS-4RA14 |
| MS-1E-1 1/8 | MS-1-1 1/8-A14-P | MS-12SA10-P | MS-12SA10-P | MS-4RA14-P | MS-4RA14-P |
| MS-1E-1 3/8 | MS-1-1 3/8-A14-P | MS-12SA14 | MS-12SA14 | MS-5RF3 | Discontinued |
| MS-1E-1 5/8 | MS-1-1 5/8-A14-P | MS-12SA14-P | MS-12SA14-P | MS-5RF3-P | Discontinued |
| MS-1E-2 1/8 | MS-1-2 1/8-A14-P | MX-12SA6 | MX-12SA6 | MS-5RA7 | MS-5RA8 |
| MS-1EX-5/8 | MS-1-5/8-A20 | MX-12SA14 | MX-12SA14 | MS-5RA7-P | MS-5RA8-P |
| MS-1EX-7/8 | MS-1-7/8-A20 | MX-18SA6 | MX-18SA6 | MS-5RA10 | MS-5RA10 |
| MS-1EX-1 1/8 | MS-1-1 1/8-A20 | MX-18SA14 | MX-18SA14 | MS-5RA10-P | MS-5RA10-P |
| MS-1EX-1 3/8 | MS-1-1 3/8-A20 | MX-20SA6 | MX-20SA6 | MS-5RA14 | MS-5RA14 |
| MS-1EX-1 5/8 | MS-1-1 5/8-A20 | MX-20SA14 | MX-20SA14 | MS-5RA14-P | MS-5RA14-P |
| MS-1EX-2 1/8 | MS-1-2 1/8-A20 | MX-14SA9-SA | MX-14SA9-SA | MX-5RA6 | MX-6RA6 |
| MS-1.375-CSXSA | MX-1.375-SA | MX-18SA9-SA | MX-18SA9-SA | MX-5RA18 | MX-6RA14 |
| MS-1.500-CSXSA | MX-1.500-SA | | | | |
| MS-1.750-CSXSA | MX-1.750-SA | Strut w/ Hanger Supports | | MX-8RA6 | |
| | | MS-2HA12 | Discontinued | MX-8RA14 | |
| | | MS-2HA12-P | Discontinued | MX-8RA14-5/8 | |
| | | MS-3HA16 | Discontinued | MX-10RA6 | |
| | | MS-3HA16-P | Discontinued | MX-10RA6-5/8 | |
| | | MX-2HA18 | Discontinued | MX-10RA14 | |
| | | MX-3HA18 | Discontinued | MX-10RA14-5/8 | |
| | | MX-4HA18 | Discontinued | MX-5RA9-SA | MX-5RA9-SA |
| | | | | MX-8RA9-SA | |
| | | | | MX-10RA9-SA | |

## Usual and Customary Pipe Sizes

| Pipe Size | Steel (Sch. 40/80) | | | | | Electric Heavy Wall OD | Electric EMT OD | Stainless Steel Tube OD | Copper types K,L,M,& DWV OD |
|---|---|---|---|---|---|---|---|---|---|
| | OD | Empty (lbs.) | | Pipe w/H20 (lbs.) | | | | | |
| | | Sch. 40 | Sch. 80 | Sch. 40 | Sch. 80 | | | | |
| 1/2" | 0.840 | 8.60 | 10.87 | | | 0.840 | 0.706 | 0.500 | 0.625 |
| 3/4" | 1.050 | 11.40 | 14.73 | | | 1.050 | 0.922 | 0.750 | 0.875 |
| 1" | 1.315 | 16.80 | 21.71 | 20.55 | 24.83 | 1.315 | 1.163 | 1.000 | 1.125 |
| 1 1/4" | 1.660 | 22.80 | 29.96 | 29.29 | 35.51 | 1.660 | 1.510 | 1.250 | 1.375 |
| 1 1/2" | 1.900 | 27.20 | 36.31 | 36.02 | 43.96 | 1.900 | 1.740 | 1.500 | 1.625 |
| 2" | 2.375 | 36.00 | 50.22 | 51.14 | 63.02 | 2.375 | 2.197 | 2.000 | 2.125 |
| 2 1/2" | 2.875 | 58.00 | 76.61 | 78.73 | 94.91 | 2.875 | 2.875 | 2.500 | 2.625 |
| 3" | 3.500 | 75.80 | 102.50 | 107.81 | 131.22 | 3.500 | 3.500 | 3.000 | 3.125 |
| 3 1/2" | 4.000 | 91.10 | 125.05 | 133.97 | 162.25 | 4.000 | | 3.500 | 3.625 |
| 4" | 4.500 | 108.00 | 149.83 | 163.16 | 199.53 | 4.500 | 4.500 | 4.000 | 4.125 |
| 5" | 5.563 | 147.00 | 207.78 | 233.74 | 287.18 | 5.563 | | | |
| 6" | 6.625 | 190.00 | 285.73 | 315.20 | 398.73 | 6.625 | | | |
| 8" | 8.625 | 286.00 | 433.88 | 502.80 | 631.88 | 8.625 | | | |
| 10" | 10.750 | 405.00 | 644.00 | 746.60 | 955.30 | 10.750 | | | |
| 12" | 12.750 | 536.00 | 886.00 | 1021.00 | 1326.40 | | | | |
| 14" | 14.000 | 633.00 | 1070.00 | 1219.40 | 1601.80 | | | | |
| 16" | 16.000 | 828.00 | 1370.00 | 1593.80 | 2067.30 | | | | |

***Note:***
*Fractional numbers reflect nominal pipe diameter, decimal numbers reflect actual O.D. in inches.*
*Pipe weights per 10' of Schedule 40 Steel Pipe. Due to variations between domestic and foreign pipe sizes and manufacturers this chart should only be used for approximations. Specific dimensional should be obtained from the pipe manufacturer.*

*Weights and diameters are provided without regard to insulation.*

## Equations

**Cross-sectional Area of a Steel Pipe can be calculated as:**

$A = 0.785\ d_i^{\ 2}$

*Where*

*A = cross-sectional area of pipe (Square Inches)*
$d_i$ *= inside diameter (inches)*

**Weight of empty steel pipes can be calculated as**

$w_p = 10.6802\ t\ (d_o - t)$

*Where*

$w_p$ *=weight of steel pipe (Pounds per Foot Pipe)*
*t = pipe wall thickness (Inches)*
$d_o$ *= outside diameter (inches)*

**Weight of water in pipes filled with water can be calculated as**

$w_w = 0.3405\ d_i^{\ 2}$

*Where*

$w_w$ *= weight of steel pipe filled with water (Pounds per Foot Pipe)*
$d_i$ *= inside diameter (inches)*

# Technical Data:

**Pipe Support Spacing** W=Water
V=Vapor

| Support Spacing (feet) | | | | | | |
|---|---|---|---|---|---|---|
| NPS-(inches) | DN-(mm) | Steel Pipe (Standard Wt) | | Copper | | PVC Pipe Sch. 80 |
| | | W | V | W | V | |
| 1/4 | 6 | -- | -- | 5 | 5 | Follow Pipe Manufacturers Recommendations |
| 3/8 | 10 | 7 | 8 | 5 | 6 | |
| 1/2 | 15 | 7 | 8 | 5 | 6 | |
| 3/4 | 20 | 7 | 9 | 5 | 7 | |
| 1 | 25 | 7 | 9 | 6 | 8 | |
| 1 1/4 | 32 | 7 | 9 | 7 | 9 | |
| 1 1/2 | 40 | 9 | 12 | 8 | 10 | |
| 2 | 50 | 10 | 13 | 8 | 11 | |
| 2 1/2 | 65 | 11 | 14 | 9 | 13 | |
| 3 | 80 | 12 | 15 | 10 | 14 | |
| 3 1/2 | 90 | 13 | 16 | 11 | 15 | |
| 4 | 100 | 14 | 17 | 12 | 16 | |
| 5 | 125 | 16 | 19 | 13 | 18 | |
| 6 | 150 | 17 | 21 | 14 | 20 | |
| 8 | 200 | 19 | 24 | 16 | 23 | |
| 10 | 250 | 22 | 26 | 18 | 25 | |
| 12 | 300 | 23 | 30 | 19 | 28 | |
| 14 | 350 | 25 | 32 | | | |
| 16 | 400 | 27 | 35 | | | |
| 18 | 450 | 28 | 37 | | | |
| 20 | 500 | 30 | 39 | | | |
| 24 | 600 | 32 | 42 | | | |
| 30 | 750 | 33 | 44 | | | |
| Source: ASPE Data Book 4 | | | | | | |

## Duct Support Spacing-Horizontal Ductwork

| Ducts Size | | Maximum Spacing (Feet) |
|---|---|---|
| Area (Sq.Ft) | Diameter (Inches) | |
| less than 4 | less than 5 | 8 |
| 4 to 10 | 5 to 38 | 6 |
| more than 10 | more than 38 | 4 |

## Pipes and Temperature Expansion

Thermal expansion in a pipe is the product of the coefficient of thermal expansion, the length and the temperature difference from the start and final temperature of the pipe.

The expansion can be calculated by using the following equation.

**The general expansion formula can be expressed as:**

$$E = eL(T_2 - T_1)$$

*Where*

E = Expansion, ft
e = Coefficient of thermal expansion
L = Length of pipe, ft
$T_2$ = Final temperature, $^oF$ $T_1$
= Initial temperature, $^oF$

Thermal expansion coefficients for some common materials can be found in the table below:

| Piping Material | Linear Temperature Expansion Coefficient - e- | |
|---|---|---|
| | (m/m.K x $10^{-6}$) | (in/in.$^oF$ x $10^{-6}$) |
| Steel | 13.0 | 7.3 |
| Copper | 16.5 | 9.3 |
| PVC thermoplastic | 52 | 29 |
| CPVC thermoplastic | 61 | 34 |
| Steel Stainless Austenitic (304) | 17.3 | 9.6 |
| Steel Stainless Austenitic (316) | 16.0 | 8.9 |

$T(^oC) = 5/9[T(^oF) - 32]$ 1 in (inch) = 25.4 mm 1 ft (foot) = 0.3048 m

## Example - Thermal Expansion of Heat- ed Alloy Steel

100 feet of alloy steel pipe is heated from 32 to 212$^o$F.

The expansion coefficient is 7.3 $10^{-6}$ (inch/inch$^o$F).

The expansion can be expressed as:

*E= (8 $10^{-6}$ in/in$^o$F)(100 feet) (12 in/ft) (212 - 32 $^o$F)*
*= 1.5768 inch*

*Therefore; a single 100' run of 1" schedule 40/80 gas pipe may expand and contract as much as +/-* 1.5768"

# Technical Data

## Typical Properties of Nylon

| PHYSICAL | Dam | 50% RH | ASTM |
|---|---|---|---|
| Specific Gravity | 1.39 | - | D-792 |
| Mold Shrinkage (1/8" bar, in/in) | 0.003 | - | - |
| Rockwell Hardness, R Scale | 121 | - | |
| Moisture, % | | | D-570 |
| 1.1 (24 Hour) | - | - | |
| 1.8 (50% RH) | - | - | |
| 6.4 (Saturation) | - | - | |
| | | | |
| | | | **MECHANICAL** |
| Tensile Strength, Break, MPa (psi) | | | D-638 |
| -40°C (-40°F) | 210 (30,400) | 215 (31,200) | |
| 23°C (73°F) | 160 (23,200) | 100 (14,500) | |
| 80°C (176°F) | 85 (12,300) | 70 (10,200) | |
| 121°C (250°F) | 70 (10,200) | 60 ( 8,700) | |
| Elongation, Break, % | | | D-638 |
| -40°C (-40°F) | 3 | 2.5 | |
| 23°C (73°F) | 2 | 6 | |
| 80°C (176°F) | 7 | 6.5 | |
| 121°C (250°F) | 7 | 6.5 | |
| | | | |
| | | | **THERMAL** |
| Melting Point, °C(°F) | 220 (428) | - | D-3418 |
| Heat Deflection @ 264 psi (1.8 MPa) °C(°F) | 208 (406) | - | D-648 |
| Coef. of Linear Thermal Expansion, mm/mm °C (in/in °F) | 0.38 X10-4 | - | E-831 |
| | | | |
| | | | **UL RATINGS** |
| Flammability Rating, 1.5mm | HB | - | UL94 |
| Relative Temperature Index, 1.5mm | | | UL746B |
| Mechanical w/o Impact, °C | 140 | - | |
| Mechanical w/ Impact, °C | 115 | - | |
| Electrical, °C | 140 | - | |
| | | | |
| | | | **ELECTRICAL** |
| Volume Resistivity, 1.5 mm | >1E13 | - | D-257 |

Nylon 6/6 is strong and tough even when exposed to high temperatures and aggressive chemicals. The most important properties are:

- Toughness at high and low temperatures
- Resistance to repeated impact
- Retention of mechanical properties and dimensions at high temperature
- Resistance to abrasion, organic solvents, oils and gasoline
- Can be molded into thin, tough, strong shapes
- Lubricity
- Long term service life at high temperatures through the use of heat stabilizers
- Excellent cost/performance ratio

# Technical Data

## Typical Properties of Grade 304 Stainless Steel

| SX | °C | Mn | P | S | Si | Cr | Ni |
|---|---|---|---|---|---|---|---|
| 304<br>304L | 0.08 max<br>0.03 max | 2.0<br>max | 0.045<br>max | 0.030<br>max | 1.0<br>max | 18.0 to<br>20.0 | 8.0 to 10.50<br>8.0 - 12.0 |

| Mechanical Properties at Room Temperature | 304 | | 304L | |
|---|---|---|---|---|
| | Typical | Minimum | Typical | Minimum |
| Tensile Strength, MPa | 600 | 515 | 590 | 485 |
| Proof Strength, (Offset 0.2 %), MPa | 310 | 205 | 310 | 170 |
| Elongation (Percent in 50mm) | 60 | 40 | 60 | 40 |
| Hardness (Brinell) | 170 | - | 170 | - |
| Endurance (fatigue) limit, MPa | 240 | - | 240 | - |

**Properties at elevated temperatures**. **Time Elevated Temperature Tensile Strength**

| Temperature, °C | 600 | 700 | 800 | 900 | 1000 |
|---|---|---|---|---|---|
| Tensile Strength, MPa | 380 | 270 | 170 | 90 | 50 |

**Creep data** Stress for a creep rate of 1% in 10 000 h.

| Temperature, °C | 550 | 600 | 650 | 700 | 800 |
|---|---|---|---|---|---|
| Stress, MPa | 120 | 80 | 50 | 30 | 10 |

Maximum Recommended Service Temperature (Oxidizing Conditions)
Continuous Service 925°C
Intermittent Service 850°C

**Properties at Sub-Zero Temperatures**

| Temperature | °C | -78 | -161 | -196 |
|---|---|---|---|---|
| Tensile Strength | MPa | 1100/950 | 1450/1200 | 1600/1350 |
| Proof Stress (Offset 0.2%) | MPa | 300/180 | 380/220 | 400/220 |
| Impact Strength (Charpy V-Notch) | J | 180/175 | 160/160 | 155/150 |

**Corrosion Resistance**

**Aqueous**-As a rough guide the following examples are given for certain pure acid-water mixtures-

| Temperature °C | 20 | | | | | | 80 | | | | | |
|---|---|---|---|---|---|---|---|---|---|---|---|---|
| Concentration, % by mass | 10 | 20 | 40 | 60 | 80 | 100 | 10 | 20 | 40 | 60 | 80 | 100 |
| Sulphuric Acid | 2 | 2 | 2 | 2 | 1 | 0 | 2 | 2 | 2 | 2 | 2 | 2 |
| Nitric Acid | 0 | 0 | 0 | 0 | 2 | 0 | 0 | 0 | 0 | 0 | 1 | 2 |
| Phosphoric Acid | 0 | 0 | 0 | 0 | 0 | 2 | 0 | 0 | 0 | 0 | 1 | 2 |
| Formic Acid | 0 | 0 | 0 | 0 | 0 | 0 | 0 | 1 | 2 | 2 | 1 | 0 |

Key: 0 = resistant - corrosion rate less than 100 mm/year
1 = partly resistant - corrosion rate 100m to 1000 mm/year
2 = non resistant - corrosion rate more than 1000 mm/year

**4.2 Atmospheric-** The performance of SX 304 compared with other metals in various environments is shown in the following table. The corrosion rates are based on a 10 year exposure.

| Environment | Corrosion Rate (mm/year) | | |
|---|---|---|---|
| | SX 304 | Aluminium-3S | Mild Steel |
| Rural | 0.0025 | 0.025 | 5.8 |
| Marine | 0.0076 | 0.432 | 34.0 |
| Marine Industrial | 0.0076 | 0.686 | 46.2 |

**Summary**

SX **304** is the most versatile and the most widely used of all stainless steels. Its chemical composition, mechanical properties, weld ability and corrosion/oxidation resistance provide the best all-around performance stainless steel at relatively low cost. It also has excellent low temperature properties and responds well to hardening by cold working. The properties quoted in this publication are typical of mill production and unless indicated should not be regarded as guaranteed minimum values for specification purposes.

## Notes: